POLITECHNIKA GDAŃSKA
WYDZIAŁ ELEKTRONIKI, TELEKOMUNIKACJI I INFORMATYKI

Student name: Grzegorz Lange
Student ID: 190906
Level of study: first-cycle studies
Form of study: full-time
Field of study: Automation, Cybernetics and Robotics
Profile: Decision Systems and Robotics

ENGINEERING DIPLOMA PROJECT

Project title in Polish: Projekt i implementacja cylindrycznej drukarki 3D

Project title in English: Design and Implementation of a Custom Cylindrical 3D Printer

Project supervisor: dr inż. Piotr Fiertek

Translated by Gemini 3.1 Pro (Preview)

ABSTRACT

This work presents a cylindrical FDM printer prototype along with tool path generation methodology for cylindrical kinematics. Cylindrical kinematics expands the range of geometries available for Cartesian 3D printing to include rotationally symmetric components, helical structures, and lathe-like products with internal geometry. The cylindrical coordinate system allows for tool orientation that eliminates the need for support structures for a wide range of components. Continuous rotation of the working drum enables continuity of extrusion trajectories along the rotational axis, leading to material properties approaching isotropic behavior.

This work presents three approaches to path generation: adaptation of existing Cartesian slicers with mathematical correction of geometric distortions and extrusion parameters; extension of the FullControl GCode Designer environment enabling direct generation of simple geometries described by mathematical functions; prototype implementation of a cylindrical slicer enabling tool path generation from STL models, incorporating perimeter wall parameters and rectilinear infill. Prototype tests confirmed the feasibility of springs, screws, and other rotational geometries without the need for support structures.

Keywords: cylindrical printer, additive manufacturing, tool path generation, support structure elimination

Field of science and technology: Mechanical Engineering, Automation and Robotics

CONTENTS

ABSTRACT **3**

TABLE OF CONTENTS **5**

LIST OF IMPORTANT SYMBOLS AND ABBREVIATIONS **6**

1 INTRODUCTION **8**

1.1 Development of FDM technology 8

1.2 Aim and scope of the thesis 8

1.2.1 Research objectives 8

1.2.2 Scope and limitations of the thesis 9

1.2.3 Thesis organization 9

2 LITERATURE REVIEW **11**

2.1 Limitations of Traditional FDM Technology 11

2.1.1 Non-planar Printing 11

2.1.2 Cylindrical Printers and Their Applications 11

2.2 Existing Implementations of Cylindrical Printing 12

2.2.1 Overview of the Development of Cylindrical Printer Technology 12

2.2.2 Contemporary Implementation in the Field of Bioprinting 13

2.3 Analysis of the Research Gap 13

3 MATHEMATICAL FOUNDATIONS **14**

3.1 Manufacturing in a Cylindrical Coordinate System 14

3.1.1 Methods of Space Description 14

3.1.2 Coordinate System Transformations 14

3.1.3 Cylindrical Toolpath Planning in AM 16

3.2 Technical Challenges of Cylindrical Printing 17

3.2.1 Resolution and Position Accuracy Analysis 17

4 SYSTEM DESIGN AND ARCHITECTURE **21**

4.1 Mechanical Design 21

4.1.1 Structural Frame 21

4.1.2 Selection of Materials for 3D Printing of Structural Components 22

4.2 Kinematics 23

4.2.1 Rotary Axis Drive 23

4.2.2 Printhead Design 25

4.3 Electronics and Control System 27

4.3.1 Electrical Wiring Configuration 27

4.4 Marlin Firmware Implementation 28

5 MANUFACTURING CAPABILITIES AND APPLICATIONS **31**
5.0.1 DfAM in Cartesian 3D printing . . . 31
5.0.2 DfAM in cylindrical 3D printing . . . 33
5.1 Unique geometric advantages . . . 35
5.1.1 Continuity of rotation . . . 35
5.1.2 Manufacturing of internal geometries . . . 35
5.1.3 Avoiding supports . . . 35

6 PATH GENERATION **38**
6.1 Application of Cartesian *slicers* . . . 38
6.1.1 Limitations and side effects . . . 38
6.1.2 Solutions to limitations . . . 40
6.1.3 Description of design using the proposed method . . . 42
6.1.4 Conclusions from the application of Cartesian *slicers* . . . 44
6.2 Path generation without a *slicer* . . . 44
6.2.1 FullControl GCode Designer . . . 45
6.2.2 Adaptation of FullControl for cylindrical printing . . . 45
6.2.3 Conclusions from the FullControl adaptation . . . 47
6.3 Existing implementations of simple *slicers* . . . 47
6.3.1 Implementation of the *slicer* in the FullControl environment . . . 48
6.3.2 Obtained results . . . 49
6.3.3 Conclusions from the cylindrical slicer implementation . . . 50

7 RESULTS AND DISCUSSION **51**
7.1 Design of the Cylindrical Printer . . . 51
7.2 Toolpath Generation . . . 51
7.3 Directions for Further Development . . . 51

LIST OF FIGURES **53**

LIST OF TABLES **54**

BIBLIOGRAPHY **57**

LIST OF IMPORTANT SYMBOLS AND ABBREVIATIONS

ABS – acrylonitrile butadiene styrene

AL – additive lathe

AM – additive manufacturing

CAD – computer aided design

CNC – computer numerical control

DfAM – Design for Additive Manufacturing

DOF – degrees of freedom

FDM – fused deposition modeling

HMI – Human Machine Interface

PC – polycarbonate

PCL – polycaprolactone

PID – Proportional-Integral-Derivative controller

PLA – polylactic acid

PWM – Pulse Width Modulation

SLA – stereolithography

SLS – selective laser sintering

STL – STereoLithography – triangle mesh file format

VFA – vertical fine artifacts

List of Important Symbols

A	–	surface area [mm^2]
d_e	–	Euclidean distance [mm]
E	–	extrusion parameter value in G-code [mm]
h_l	–	radial layer thickness [mm]
i_g	–	mechanical gear ratio
I	–	surface coverage intensity
$\mathbf{J}$	–	Jacobian matrix of coordinate transformation
K_p, K_i, K_d	–	PID controller parameters (proportional, integral, derivative)
l	–	segment length [mm]
r	–	radius or distance of a point from the rotation axis in the cylindrical coordinate system [mm]
r_d	–	working drum radius of the cylindrical printer [mm]
r_i	–	radius of the i-th cylindrical layer [mm]
s	–	arc length on the cylindrical surface [mm]
T_g	–	glass transition temperature of the material [℃]
T_m	–	melting temperature of the material [℃]
T_n	–	extruder nozzle temperature [℃]
V	–	volume [mm^3]
w	–	extrusion path width [mm]
x, y, z	–	Cartesian coordinates of a point [mm]
θ	–	radius angle in the cylindrical coordinate system [°]
$\sigma_x, \sigma_y, \sigma_z$	–	positioning uncertainty in Cartesian axes [mm]
$\sigma_r, \sigma_\theta, \sigma_h$	–	positioning uncertainty in cylindrical axes [mm, rad, mm]

1. INTRODUCTION

The wide availability and low entry barrier, contrasting with the array of possibilities offered by three-dimensional printing technology, have attracted hobbyists, engineers, and artists from all over the world. The birth, blossoming, and maturation of additive manufacturing fueled by the cooperation of people acting for the benefit of the entire community turned into an ecosystem of mutual inspiration and open knowledge sharing, where science, engineering, and art coexist and drive each other.

1.1. Development of FDM technology

Fused deposition modeling (FDM) is the most popular of the additive manufacturing (AM) processes. FDM technology experienced rapid development after its democratization in 2009, following the expiration of the 1988 Stratasys patent [1]. The essence of the FDM process lies in the careful, layer-by-layer deposition of plasticized thermoplastic until a new object is formed. The material is supplied by an extruder and distributed from a nozzle, whose precise positioning is ensured by a computer numerical control (CNC) machine.

In the initial phase of its development, the innovative production technology of FDM was perceived primarily as a tool supporting rapid prototyping, rather than an independent method of manufacturing goods. The decade 2010–2020 was characterized by dynamic technical progress of FDM technology and market development, with a significant part of the contributions attributed to the *open source* community. Currently, at the moment of technical maturity of printing machines and the advancement of production materials, the actual usefulness of FDM technology in manufacturing processes is primarily determined by the development of design methodologies dedicated to additive manufacturing (DfAM) [2].

1.2. Aim and scope of the thesis

The main aim of the thesis is to develop a prototype of a cylindrical 3D printer as an independent machine. Special attention is also paid to path planning algorithms, including the conditions that must be met to fully utilize the advantages of cylindrical geometry.

1.2.1. Research objectives

The work began with an analysis of technical literature regarding existing implementations of cylindrical printers, in order to identify optimal physical construction solutions. Design works and implementations focus on the construction of a dedicated cylindrical machine, in contrast to the approach used in the literature so far based on the adaptation of conventional Cartesian printers. Designing the printer from scratch allows for the optimization of the system architecture for specific requirements of cylindrical kinematics, and makes the solution independent from external manufacturers. The final goal of the work is the physical implementation of the machine 1.1 and the production of simple prints with geometry impossible to achieve on standard Cartesian printers. The implementation aims to indicate the direction of technology development and identify potential system problems in real-world conditions.

1.2.2. Scope and limitations of the thesis

Limiting the scope of the thesis aims to ensure the achievability and reproducibility of the project. The adopted limitations concern construction materials, electronic components, and the scope of functionality of the prototype. The work attempted to use available *open source* solutions and components widespread in RepRap-type printers or their commercial counterparts. Structural elements were designed to allow their production using a standard FDM-type 3D printer, without the need for advanced tools or equipment.

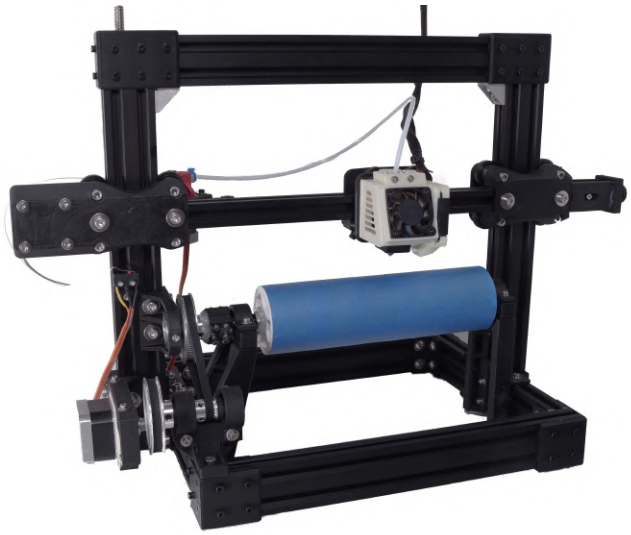

Figure 1.1: Photograph of the physical implementation of the cylindrical printer made as part of the project

The prototype of the created cylindrical printer 1.1 omits a number of functions that would be necessary in a fully functional machine. The omitted functions include: lack of a work surface leveling system; lack of a dedicated Human Machine Interface (HMI); lack of a closed feedback loop for controlling the angular position of the drum. Open-loop control with a stepper motor can lead to the accumulation of positioning errors in long-term processes requiring multiple revolutions of the drum or high moments of inertia of the print.

1.2.3. Thesis organization

The "Literature review" chapter is dedicated to a detailed analysis of the technical state of the mechanical structures of cylindrical printers and toolpath generation algorithms. Examples of mechanical structures on the basis of which the prototype of the physical implementation was planned, approaches to path generation, and applications of cylindrical printers are described.

The "Mathematical foundations" chapter presents the fundamental mathematical concepts on which cylindrical print path generation algorithms are based. An analysis of resolution and positioning accuracy in the cylindrical system was also performed, on the basis of which the required specifications of the cylindrical printer prototype were determined.

The "System design and architecture" chapter describes the design and implementation process of the physical prototype of the cylindrical 3D printer. It discusses the mechanical architecture of the machine, the selection of electronic components, and construction solutions ensuring the required positioning resolution. The tested rotary drive mechanical reduction systems, linear axis drive system, electronics, control system, and Marlin software adaptations are

presented.

The "Manufacturing capabilities and applications" chapter presents an analysis of design principles for additive manufacturing in the context of both Cartesian and cylindrical printers. The first part of the chapter contains a presentation of limitations and good design practices in standard FDM printing, on which the second part is based, presenting the unique geometric advantages of cylindrical printing.

The "Toolpath generation" chapter presents the methodology of trajectory planning for a cylindrical printer. It discusses path generation approaches used in the literature on the subject, along with their limitations and possibilities. Based on the concepts of the discussed path generation approaches, new solutions are proposed and their implementations are presented. Directions for further development of *slicing* algorithms technology for cylindrical kinematics are indicated.

2. LITERATURE REVIEW

2.1. Limitations of Traditional FDM Technology

FDM technology struggles with a number of limitations that constitute a barrier to its application in many branches of industry. Most of these barriers stem from the geometric limitations of the technology, production time, and frequently insufficient mechanical properties.

Geometric and Time Limitations

Among the most critical limitations are geometric barriers related to manufacturing structures with a non-planar orientation. As noted by Zhao and co-authors [3]: "Traditional XYZ printers are perfectly adept at planar layer slicing but encounter limits when fabricating non-horizontal structures, overhangs, and components with complex geometry [4–6], which require support structures [2], increasing both production time and material costs". Increasing the power of actuators can certainly yield improvements in production times, but it is directly tied to an increase in costs and does not address the methodology's problems. The aforementioned support structures are not an integral part of the process; they result from geometric limitations and the inability to print without support.

Mechanical Property Limitations

Currently used filaments, which are the primary form of delivering raw material from the extruder nozzle, are characterized by significantly lower strength and stiffness compared to ceramics or metals commonly used in industry. The range of available materials includes, among others, polymers, foams, and composites; however, regardless of the material used, the FDM process does not allow for achieving fully isotropic mechanical properties of the base material. This is due to the nature of the additive process of layer deposition and the extrusion of material strands. Interlayer adhesion remains significantly weaker than the strength in the direction parallel to the continuous lines within a single layer, which manifests as a strong anisotropy of the mechanical properties of the manufactured part.

2.1.1. Non-planar Printing

The above problems are being addressed by research into non-planar 3D printing technologies, implemented by printers with a non-Cartesian architecture or systems characterized by an increased number of degrees of freedom (DOF). These solutions allow for the elimination of support structures and enable the orientation of successive material layers in accordance with the predicted directions of mechanical stress propagation. Non-planar printing theoretically allows for achieving near-isotropic strength properties; however, optimal tool path planning and the complication of inverse kinematics, caused by the addition of further degrees of freedom of movement, remain a problem.

2.1.2. Cylindrical Printers and Their Applications

The simple kinematics of cylindrical printers, combined with the coverage of a wide range of geometries different from those possible to produce on classic FDM printers, can provide a solution

to the problem that printers with an increased number of degrees of freedom are attempting to solve. The design of cylindrical printers modifies Cartesian 3D printers with an X gantry on an elevated OZ axis (Cartesian gantry Z-lift) by replacing the moving bed (linear movement in the OY axis) with a rotating drum performing rotary movement around the OX axis. This simple change opens up new possibilities for manufacturing geometries that were previously difficult or impossible to realize in conventional Cartesian systems. It becomes possible to print elements such as propellers and rotors, structures with spiral geometry (springs, screws), components of a lathe nature with consideration for internal geometry, as well as biological tubular structures, including blood vessels, without supports.

The application of cylindrical printing technology in the context of bioprinting is particularly desirable, as it can enable the creation of robust biological constructs. Reeser and co-authors state [7]: "A confounding issue in the 3D printing of biomaterials is the collapse or deformation of structures caused by the weak mechanical properties of common biomaterials. This can be particularly problematic for constructs containing voids, especially tubular biological structures. [...] The lathe-printer supplies a methodology for building such structures radially outward one layer at a time, as opposed to the complex coordination required to co-print biomaterials with unique properties, different cell types, and support structures". Coupled with the latest advancements in bioprinting, such as ultra-high-resolution printing of lines with a width of 20 μm using a mosquito proboscis [8], 3D printing technology opens up possibilities for manufacturing advanced organic structures.

2.2. Existing Implementations of Cylindrical Printing

Despite more than a decade passing since the proposal of the first prototypes, cylindrical printing technology remains a niche solution, not crossing the boundary of research laboratories. Research teams interested in developing this technology most often decide to adapt existing Cartesian printers. To date, no team has yet developed complete software for planning the manufacturing process tool paths.

2.2.1. Overview of the Development of Cylindrical Printer Technology

The first physical prototype of the additive lathe (AL) technology was presented by Yoav Sterman in 2011 as part of a project called "The Additive Lathe" [9]. This prototype had numerous mechanical limitations, the most significant of which was the inability to adjust the distance between the cylinder and the print head. This approach made it impossible to apply successive layers of material. From a topological point of view, it was merely a two-dimensional machine operating on a cylindrical surface. In 2013, Kenich and colleagues developed the first prototype capable of movement in the Z direction [10]. This system, inspired by the *open-source* RepRap Mendel printer, was the first functional AL printer.

The latest achievements in the field of cylindrical printing were presented by Zhao and co-authors [3], who developed a cost-effective implementation of a rotary FDM printer based on the modification of the popular Prusa i3 MK3s printer. The task of the control system was performed by the Duet 2 WIFI motherboard and RepRap firmware version 3.1.1.

The process planning methodology developed by Zhao and co-authors is based on surface mapping and includes a twelve-step cylindrical slicing algorithm. The process begins by importing a 3D model in STL format, followed by the calculation of the central axis of the model and ensuring its coaxiality with the center of the rotary build platform. The system generates

concentric cylindrical slicing surfaces in the radial direction, which intersect with the 3D model to extract the contours of each curved layer. Contour points in Cartesian coordinates (x_c, y_c, z_c) are then mapped to points (r_c, h_c, θ_c) in cylindrical coordinates on the cylindrical surface. The final stage is generating control code compliant with the G-code format.

2.2.2. Contemporary Implementation in the Field of Bioprinting

In the field of bioprinting, where the weak mechanical properties of common biomaterials pose a challenge, cylindrical printing enables the construction of tubular structures radially outward layer by layer, eliminating the problem of the structure collapsing under its own weight. Sichuan Revotek Co. Ltd. announced in 2016 the successful implantation of bioprinted blood vessels into thirty Rhesus monkeys, although these results were not published in a peer-reviewed journal [11; 12].

The technology has also demonstrated utility in manufacturing stents from bioresorbable polymers. Guerra and co-authors conducted systematic studies on the influence of printing parameters (temperature, speed, material flow rate) on the physical properties of PCL stents [13–15]. The research culminated in the successful application of pneumatic composite actuators in the field of soft robotics.

2.3. Analysis of the Research Gap

The broader application of AL technology remains hindered by the lack of available software for generating tool paths that includes the capabilities of modern slicers. Various research teams have developed proprietary workarounds for this problem: Kenich and colleagues applied the Slic3r platform in an unconventional way, modeling parts as flat, which limited the complexity of the geometries that could be manufactured. Coulter and co-authors implemented the most advanced software solution, utilizing the Grasshopper3D plugin for the Rhino software to create reconstructions of scanned doubly-curved surfaces and generate tool paths along these curved surfaces [16; 17]. Solutions used so far have strong geometric limitations or do not exploit the advantages of cylindrical printer geometry.

Cylindrical space is characterized by variable angular resolution as a function of the radius, which makes the use of mechanical reduction or microstepping of stepper motors necessary to maintain adequate resolution. Implementations realized to date rely exclusively on systems with microstepping of stepper motors, which can lead to a decrease in the holding torque of stepper motors, and consequently cause skipped steps or the emergence of vertical fine artifacts (VFA). The use of a dedicated mechanical reduction in the drum drive system can improve positioning resolution without excessive microstepping operation.

3. MATHEMATICAL FOUNDATIONS

This chapter deals with issues related to coordinate system transformations used in toolpath generation algorithms, as well as calculations of required resolutions, upon which the requirements of the mechanical design of the project were based.

3.1. Manufacturing in a Cylindrical Coordinate System

Fully utilizing the potential of the cylindrical printer geometry, both in terms of the mechanical properties of the manufactured components and the visual quality of their execution, requires the direct integration of the cylindrical coordinate system into the design process. Regardless of the number of degrees of freedom or the kinematic configuration of the machine using FDM technology, workpieces are manufactured in the process of sequential deposition of successive material layers. The orientation of the layer planes relative to the geometry of the manufactured element has a significant impact on the distribution of mechanical stresses, the quality of the surface finish, and the accuracy of curvature mapping. Cylindrical surfaces become the most natural and effectively mapped type of geometry, while flat surfaces, such as the walls of a cuboid or a cube, in cylindrical geometry are subject to the formation of characteristic stair-stepping effect artifacts.

3.1.1. Methods of Space Description

Traditional computer-aided design (CAD) programs define the workspace in a Cartesian coordinate system, utilizing three mutually perpendicular axes to parameterize three-dimensional models. From the designer's point of view, the geometry of the object in real space is significant; cylindrical and Cartesian coordinate systems describe the same space in two different ways, so the use of a cylindrical or Cartesian system to describe an object does not matter. On the other hand, from a manufacturing point of view in FDM technology, three-dimensional space is constructed from discrete sections of two-dimensional space. The realization of three-dimensional space in the Cartesian system is directly a subset of Euclidean space with discretization along the Z axis. However, describing real space using the layers of a cylindrical system requires the use of continuous cylindrical planes representing non-Euclidean two-dimensional space.

3.1.2. Coordinate System Transformations

Because the design of elements typically takes place in CAD programs, which use the Cartesian coordinate system as the basic workspace, the AM process requires the application of appropriate transformations to the cylindrical coordinate system. The analytical equations of the transformation allow for the transition between the cylindrical and Cartesian systems, however, they can also be used as a tool to transform the geometry of the object itself.

Cartesian Coordinate System

The Cartesian coordinate system is defined by three mutually perpendicular axes (OX, OY, OZ). The position of any point P in space is unambiguously determined by the triplet of coordinates (x, y, z), where:

- $x \in \mathbb{R}$ – the coordinate along the OX axis, representing the displacement in the horizontal direction,
- $y \in \mathbb{R}$ – the coordinate along the OY axis, representing the displacement in the perpendicular direction to the OX axis in the horizontal plane,
- $z \in \mathbb{R}$ – the coordinate along the OZ axis, representing the displacement in the vertical direction.

The position vector of point P in the Cartesian system can be expressed as:

$$\vec{r}_{\text{cart}} = x\,\vec{e}_x + y\,\vec{e}_y + z\,\vec{e}_z = \begin{bmatrix} x \\ y \\ z \end{bmatrix}, \tag{3.1}$$

where $\vec{e}_x$, $\vec{e}_y$, $\vec{e}_z$ denote the versors (unit vectors) of the respective axes.

Cylindrical Coordinate System

The cylindrical coordinate system is an alternative system of parameterizing three-dimensional space, particularly useful in describing axisymmetric geometries and rotational motion. In this system, the position of point P is determined by the coordinates (r, θ, h), where:

- $r \in [0, +\infty)$ – radius, indicating the distance of the point from the OZ axis (the axis of rotation),
- $\theta \in [0, 2\pi)$ – azimuthal angle, determining the angular position relative to a chosen reference plane, by default the XZ plane,
- $h \in \mathbb{R}$ – height along the cylinder axis, corresponding to the z coordinate in the Cartesian system.

The cylindrical system is a natural choice for machines with rotational kinematics, such as AL, because it directly corresponds to the degrees of freedom of the mechanical system: rotation around the axis, radial displacement, and longitudinal displacement.

Transformation Equations

The transformation between the Cartesian and cylindrical systems is reversible and described by the following analytical relationships. The conversion from the cylindrical system (r, θ, h) to the Cartesian system (x, y, z) is given by the formulas:

$$\begin{cases} x = r\cos(\theta) \\ y = r\sin(\theta) \\ z = h \end{cases}, \tag{3.2}$$

The geometric interpretation of equations (3.2) involves projecting a point defined by radius r and angle θ onto the XY plane while preserving the height coordinate $z = h$.

The inverse transformation, from the Cartesian system (x, y, z) to the cylindrical system (r, θ, h), is expressed as:

$$\begin{cases} r = \sqrt{x^2 + y^2} \\ \theta = \arctan 2(y, x) \\ h = z \end{cases}, \tag{3.3}$$

where the function $\arctan 2(y, x)$ returns the angle in the full range $[0, 2\pi)$ or $(-\pi, \pi]$, depending on the implementation, taking into account the signs of both arguments to unambiguously determine the quadrant. The height coordinate h remains unchanged in both systems, therefore, the OZ axis in the Cartesian system coincides with the cylinder axis in the cylindrical system.

The presented transformation equations describe a global coordinate conversion; however, fully understanding the geometric properties of this transformation also requires an analysis of its local differential characteristics, which allow determining the propagation of positioning errors, metric distortions, and the dependence of spatial resolution.

Transformation Jacobian Matrix

The transformation Jacobian matrix is obtained by calculating the partial derivatives of the Cartesian coordinates (x, y, z) with respect to the cylindrical coordinates (r, θ, h). Differentiating equations (3.2), we obtain the Jacobian matrix of the transformation from the cylindrical to the Cartesian system:

$$\mathbf{J} = \begin{bmatrix} \frac{\partial x}{\partial r} & \frac{\partial x}{\partial \theta} & \frac{\partial x}{\partial h} \\ \frac{\partial y}{\partial r} & \frac{\partial y}{\partial \theta} & \frac{\partial y}{\partial h} \\ \frac{\partial z}{\partial r} & \frac{\partial z}{\partial \theta} & \frac{\partial z}{\partial h} \end{bmatrix} = \begin{bmatrix} \cos(\theta) & -r\sin(\theta) & 0 \\ \sin(\theta) & r\cos(\theta) & 0 \\ 0 & 0 & 1 \end{bmatrix}. \tag{3.4}$$

The determinant of the Jacobian matrix is expressed as:

$$|\mathbf{J}| = r. \tag{3.5}$$

The positive value of the determinant $|\mathbf{J}| = r$, $r > 0$ confirms that the transformation preserves spatial orientation, and determines the local volume scaling factor during the transformation: the volume element $\mathrm{d}V_{\text{cart}} = \mathrm{d}x\,\mathrm{d}y\,\mathrm{d}z$ in the Cartesian system corresponds to the element $\mathrm{d}V_{\text{cyl}} = r\,\mathrm{d}r\,\mathrm{d}\theta\,\mathrm{d}h$ in the cylindrical system.

The linear dependence of the Jacobian determinant on the radius r is visible, thus for a constant angle increment $\Delta\theta$ the arc length that a point travels on the cylinder surface increases proportionally to the radius:

$$\Delta s = r \cdot \Delta\theta. \tag{3.6}$$

In order to maintain a constant linear print resolution at different radii, it is necessary to apply a variable angular resolution, or a sufficiently high angular resolution to avoid discretization errors throughout the working volume. This property has direct consequences for both the mechanical design of the additive lathe-printer and the software realization of positioning.

3.1.3. Cylindrical Toolpath Planning in AM

The transformation of three-dimensional object models into motion instructions for the print head is typically performed using specialized software called a *slicer*. In the traditional approach to additive manufacturing, used in Cartesian printers, the method of generating toolpaths involves intersecting the 3D model mesh with a series of planes parallel to the build platform. Successive layers are separated from each other by a layer height distance h_l or Δz. For the most commonly used nozzle with an exit orifice diameter of 0.4 mm, a typical layer height falls in the range of 0.12 mm to 0.32 mm. Based on the flat cross-sections created in this way, the *slicer* algorithms calculate the toolpaths and the material feed rate.

The difference in cutting planes between the Cartesian and cylindrical systems means that the paths generated for a Cartesian printer cannot be directly used for an additive lathe-printer. An analogous solution would require writing a *slicing* program from scratch. Considering the complexity of modern *slicers*, writing a new *slicer* is a task too complex for a single research team. The fifth chapter describes alternative methods of generating toolpaths described in the literature, along with a proposal for a new solution and direction of technology development.

In the cylindrical *slicing* process, concentric cylindrical surfaces, used to cut the 3D model, are defined by the equation:

$$(x - x_c)^2 + (y - y_c)^2 = r_i^2, \tag{3.7}$$

where $i \geq 1$ denotes the number of the cutting surface and the radii of successive cylindrical surfaces satisfy the condition $r_{max} \geq r_i \geq r_{min}$. The minimum radius value r_{min} corresponds to the internal surface of the manufactured element, while r_{max} defines its external surface. The layer height in cylindrical printing is defined as the difference between the radii of two adjacent cutting surfaces:

$$h_l = r_{i+1} - r_i \quad \text{for} \quad i \geq 1. \tag{3.8}$$

3.2. Technical Challenges of Cylindrical Printing

The angular resolution of the realized trajectory changes as a function of the radius 3.6. Maintaining adequate print quality with an increasing diameter of the manufactured element requires applying sufficient angular resolution. The determination of the appropriate resolution was carried out based on an analysis of the impact of mechanical reduction and microstepping on the minimum step length and error accumulation.

3.2.1. Resolution and Position Accuracy Analysis

The linear resolution in the Cartesian system for the OX and OY axes, driven by timing belts, is expressed by the formula:

$$\Delta x = \Delta y = \frac{p_b}{n_s \cdot m}, \tag{3.9}$$

where p_b denotes the pitch of the timing belt (the distance between teeth), n_s is the number of motor steps per revolution (standard 200 for NEMA 17 motors), and m represents the number of microsteps. Analogously, for the OZ axis driven by a lead screw:

$$\Delta z = \frac{p_s}{n_s \cdot m}, \tag{3.10}$$

where p_s denotes the lead screw pitch.

For a typical mechanical configuration, the linear resolution of individual Cartesian axes is expressed as follows: the OY axis driven by a GT2 timing belt (pitch $p_b = 2$ mm) with a 16-tooth pulley achieves a resolution:

$$\Delta y = \frac{p_b \cdot N_t}{n_s \cdot m} = \frac{2 \times 16}{200 \times 16} = 0.01 \text{ mm}, \tag{3.11}$$

where $N_t = 16$ denotes the number of teeth on the drive pulley. For the OZ axis using a T8 lead screw with a pitch of $p_s = 8$ mm, the resolution is:

$$\Delta z = \frac{p_s}{n_s \cdot m} = \frac{8}{200 \times 16} = 0.0025 \text{ mm}. \tag{3.12}$$

The resolution of the OZ axis (0.0025 mm) is four times higher than the OY axis (0.01 mm), for a system consisting of the most common combination of components. The discrepancy can

be explained based on the accuracy requirements for individual directions. The layer height in the FDM process is usually in the range of 0.08–0.3 mm, while the positioning accuracy in the horizontal plane must ensure precise reproduction of the contour geometry with a line width of about 0.4 mm for a standard nozzle. Normalizing the resolution against the required dimensions, we obtain: for the OZ axis a ratio $\Delta z/h_l \approx 0.0025/0.08 \approx 3.1\%$, and for the OY axis a ratio $\Delta y/(w_l/2) \approx 0.01/0.2 = 5\%$ (where $w_l \approx 0.4$ mm denotes the line width).

In the cylindrical system, the angular resolution of the rotary axis with a mechanical transmission is expressed as:

$$\Delta\theta = \frac{2\pi}{n_s \cdot m \cdot i_g}, \tag{3.13}$$

where i_g denotes the gear ratio of the reducer (for $i_g = 1$ the transmission is absent). The arc resolution at radius r is then:

$$\Delta s(r) = r \cdot \Delta\theta = r \cdot \frac{2\pi}{n_s \cdot m \cdot i_g} = k \cdot r, \tag{3.14}$$

where the proportionality coefficient $k = \frac{2\pi}{n_s \cdot m \cdot i_g}$ is constant for a given hardware configuration.

The total gear ratio of the rotary system is defined as the product of microstepping and the mechanical gear ratio: $i_{\text{total}} = m \cdot i_g$. Table 3.1 presents the values of arc resolution Δs for different total gear ratios and selected values of radius r, assuming a standard NEMA 17 motor ($n_s = 200$).

Table 3.1: Arc resolution Δs [mm] as a function of radius r and the total gear ratio of the rotary system for a NEMA 17 motor

r [mm]	Total gear ratio $i_{\text{total}} = m \cdot i_g$			
	1	16	32	64
10	0.0196	0.00123	0.000614	0.000307
50	0.0982	0.00614	0.00307	0.00153
100	0.1963	0.0123	0.00614	0.00307
200	0.3927	0.0245	0.0123	0.00614

The analysis of Table 3.1 shows that a standard NEMA17 stepper motor (without a gear ratio $i_{\text{total}} = 1$) achieves a minimum arc resolution at radius $r = 200$ mm of as much as 0.4 mm. The value of 0.4 mm is 40 times higher than the resolution of the OX axis, which would cause significant measurement inaccuracies and uneven material distribution. A total gear ratio of $i_{\text{total}} = 16$ reduces the arc resolution sixteenfold, which for $r = 200$ mm gives a value of 0.0245 mm, already close to the typical resolution of Cartesian printers, but still insufficient. If we take the resolution on the OX axis, amounting to 0.01 mm, as the target resolution metric, the preferred combination requires a total reduction of $i_g \approx 32$.

Achieving the required total gear ratio is possible through various combinations of microstepping and mechanical reduction. For example, a total gear ratio of $i_{\text{total}} = 16$ can be achieved using 1/16 microstepping without a gear ratio ($m = 16, i_g = 1$), or 1/8 microstepping with a 2:1 gear ratio ($m = 8, i_g = 2$). The choice of a specific combination depends on a compromise between the torque of the stepper motor (which decreases as microstepping increases), smoothness of movement (which increases with higher microstepping), and the complexity of the mechanical structure (which grows with an increase in the gear ratio i_g). Because the moment of inertia of the working drum, combined with the impact of the mass of the created print, can reach

high values of torque acting on the stepper motor, there is a risk of exceeding the motor's holding torque with a high degree of microstepping. Mechanical reduction provides both an improvement in resolution and a mechanical advantage reducing the impact of the drum's moment of inertia on the stepper motor; thus, increasing the value of mechanical reduction allows the use of a greater degree of microstepping.

Error Propagation Analysis

The analysis of positioning error propagation between coordinate systems requires taking into account the differential dependencies of the transformation. The position uncertainty in the Cartesian system is expressed as:

$$\sigma_{\text{pos,cart}} = \sqrt{\sigma_x^2 + \sigma_y^2 + \sigma_z^2}, \tag{3.15}$$

while in the cylindrical system the corresponding expression takes the form:

$$\sigma_{\text{pos,cyl}} = \sqrt{\sigma_r^2 + (r \cdot \sigma_\theta)^2 + \sigma_h^2}. \tag{3.16}$$

The component $(r \cdot \sigma_\theta)^2$ reveals the dependence of position uncertainty on the radius. The impact of the angular error σ_θ on the total positioning uncertainty is not linear.

The error propagation from the cylindrical to the Cartesian system results directly from the Jacobian matrix of transformation (3.4). Differentiating the transformation equations (3.2) and applying the law of propagation of uncertainty, we obtain the error components in the Cartesian system:

$$\sigma_x^2 = \left(\frac{\partial x}{\partial r}\right)^2 \sigma_r^2 + \left(\frac{\partial x}{\partial \theta}\right)^2 \sigma_\theta^2 = \cos^2(\theta)\,\sigma_r^2 + r^2 \sin^2(\theta)\,\sigma_\theta^2, \tag{3.17}$$

$$\sigma_y^2 = \left(\frac{\partial y}{\partial r}\right)^2 \sigma_r^2 + \left(\frac{\partial y}{\partial \theta}\right)^2 \sigma_\theta^2 = \sin^2(\theta)\,\sigma_r^2 + r^2 \cos^2(\theta)\,\sigma_\theta^2, \tag{3.18}$$

$$\sigma_z^2 = \sigma_h^2. \tag{3.19}$$

Summing components (3.17) and (3.18), taking into account the trigonometric identity $\sin^2(\theta) + \cos^2(\theta) = 1$, we get:

$$\sigma_x^2 + \sigma_y^2 = \sigma_r^2(\cos^2(\theta) + \sin^2(\theta)) + r^2\sigma_\theta^2(\sin^2(\theta) + \cos^2(\theta)) = \sigma_r^2 + r^2\sigma_\theta^2, \tag{3.20}$$

which confirms the independence of the total position error from the angle θ and the linear dependence of the angular component on the radius r.

Assuming that positioning errors are dominated by the discrete resolution of the mechanical system, the uncertainties can be approximated as: $\sigma_r \approx \Delta r$, $\sigma_\theta \approx \Delta\theta$, $\sigma_h \approx \Delta z$. From equation (3.20) it follows that the angular component of the position error is $r \cdot \sigma_\theta = r \cdot \Delta\theta$, making it analogous to the arc resolution $\Delta s(r)$ from Table 3.1.

The relative contribution of the angular component to the total positioning error can be determined by calculating the percentage share of $(r \cdot \sigma_\theta)^2$ in the total squared error. Assuming typical error values for the radial axis and height comparable to the Cartesian axes ($\sigma_r \approx 0.01$ mm, $\sigma_h \approx 0.0025$ mm), Table 3.2 presents the total positioning error and the percentage share of the angular component for selected configurations.

Table 3.2 presents the overall significance of the angular error in the cylindrical system. For large working radii ($r = 200$ mm) with insufficient gear ratio ($i_{\text{total}} = 16$), the angular component accounts for as much as 85% of the total squared error affecting positioning precision. Increasing

Table 3.2: Total positioning error $\sigma_{\text{pos,cyl}}$ and the percentage share of the angular component for $\sigma_r = 0.01$ mm, $\sigma_h = 0.0025$ mm

r [mm]	i_{total}	$r \cdot \sigma_\theta$ [mm]	$\sigma_{\text{pos,cyl}}$ [mm]	Angular share [%]
100	16	0.0123	0.0161	58.7
100	32	0.00614	0.0120	26.2
200	16	0.0245	0.0266	85.0
200	32	0.0123	0.0161	58.7
200	64	0.00614	0.0120	26.2

the gear ratio to $i_{\text{total}} = 32$, a value deemed the target based on the analysis of Table 3.1, reduces this share to 59% – which means that the error share dominates and exceeds the combined error of the OX and OZ axes. A reduction level with $i_{\text{total}} = 64$ lowers the error share to 26%, making the errors of all axes comparable. Therefore, to preserve balanced spatial precision at large working radii ($r \geq 200$ mm), a total gear ratio of $i_{\text{total}} \geq 64$ is required.

Resolution Analysis Conclusions

Microstepping of stepper motors provides smoother movement, noise reduction, and better surface finish quality. However, this method is characterized by a decrease in holding torque as the microstepping degree increases, which limits the ability to manufacture objects with high inertia and forces a reduction in printing speed by reducing acceleration and the instantaneous acceleration change value (*jerk*). An alternative solution is to apply mechanical reduction in the rotary system, which allows maintaining full torque while simultaneously increasing angular resolution. A practical solution involves combining both methods and adapting the required resolution to the machine's dimensional assumptions. Based on the calculations of the impact of error components, it was decided that the target total gear ratio is $i_{\text{total}} \geq 64$.

4. SYSTEM DESIGN AND ARCHITECTURE

The overarching goal of the adopted design strategy was to maximize accessibility and reproducibility of the project. Efforts were made to utilize *open source* solutions prevalent in RepRap 3D printers and their commercial equivalents. The applied components, both mechanical and electronic, are widely used in the construction of 3D printers and CNC machines, ensuring high availability and simplifying the adaptation process of existing solutions. The total cost of mechanical and electronic materials amounted to approximately 800 PLN.

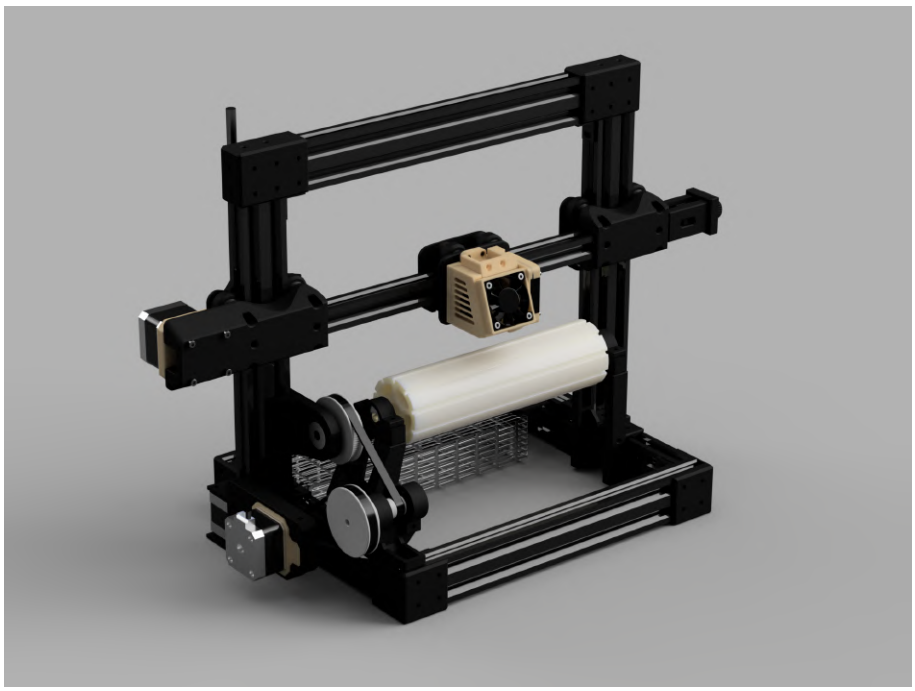

Figure 4.1: Render of the created CAD printer project

4.1. Mechanical Design

The mechanical structure design of the AL was executed considering the assumptions of *open source* solution compatibility and budget constraints. The main structural element comprises aluminum profiles. The remaining parts, including connecting elements, brackets, and gears, were manufactured using 3D printing. The implementation utilized a ready-made MK8 hotend and a Bowden extruder attachment for a stepper motor. The visualization of the printer's CAD project, created for the purpose of the project, is presented in figure 4.1.

4.1.1. Structural Frame

The design utilizes aluminum profiles with cross-sections of 20×20 mm and 20×40 mm, which allow for building a rigid structure and serve as linear guides for roller bearings. The base frame and the vertical gantry were made of profiles with a 20×40 mm cross-section, while the sliding system carrying the printhead was constructed from a lighter 20×20 mm profile. Inside the aluminum profile channels, a GT2 timing belt was routed to execute the linear movement of the printhead, driven by a stepper motor.

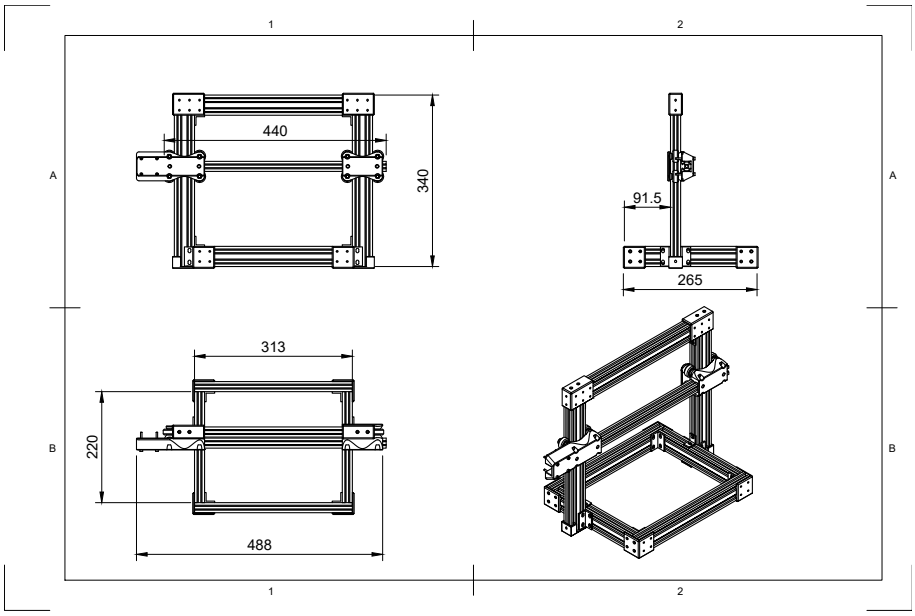

Figure 4.2: Structural frame schematic

Figure 4.2 presents a schematic of the structural frame with dimensions given in millimeters. Segment A1 contains the front view; segment B1 contains the top view; segment A1 contains the side view; segment B2 contains the isometric view.

The aluminum profile connectors were designed based on the cross-sectional profile of the aluminum profile. The connectors feature rails that allow them to slide into the profile ends, and the connections were made using T-slot nuts.

4.1.2. Selection of Materials for 3D Printing of Structural Components

The selection of appropriate polymers for 3D printed components considered mechanical and thermal requirements. Parts directly adjacent to elements generating significant amounts of heat, i.e., stepper motors and the extruder, were made of PC/ABS, a polymer blend of polycarbonate (PC) and acrylonitrile butadiene styrene (ABS). The PC material is characterized by a high yield temperature (glass transition temperature $T_g \approx 147$ ℃) and an exceptionally high melting point ($T_m \approx 267$ ℃), which means it is resistant to thermal deformation in the vicinity of the extruder heater and in direct contact with stepper motors. Stepper motors can reach casing temperatures ranging from 60 ℃ to 80 ℃ under prolonged operation conditions. As an additional heat dissipation mechanism, metal frame elements were utilized, functioning as a heatsink in this case, dissipating heat generated by the motor windings over a large surface area.

Pure PC exhibits a very high linear shrinkage of 1.0 to 2.5%, which entails an extremely high risk of deformation and detachment from the buildplate during the printing process. For this reason, manufacturing components from pure PC requires the use of an enclosed printing chamber with controlled ambient temperature. Since most consumer machines lack ambient printing temperature control, a filament with an ABS admixture was used. Adding the ABS admixture (whose linear shrinkage is 0.8 to 1.5%) to the PC/ABS composite significantly lowers the total shrinkage of the blend and improves adhesion to the build surface, allowing for the production of parts on printers lacking a heated chamber. The resulting filament still has high shrinkage, so to further minimize thermal deformations, the components were designed with as flat a base

geometry as possible and with maximum contact area with the buildplate. The printing process was executed using elevated buildplate temperatures ($T_b > 100$℃, recommended 110 to 120℃) as well as a *brim* feature with a width of 15 to 20 mm, which increases the adhesion area of the bottom layer and counteracts the warping of corners, and a *draft-shield* feature that reduces the risk of creating convection currents cooling the produced part. Such a print process configuration enables reliable manufacturing of PC/ABS elements on commonly available consumer printers like the Ender 3 or Prusa i3.

The remaining structural components, characterized by moderate mechanical requirements and not subject to long-term exposure to elevated temperatures, were made of polylactic acid (PLA). The PLA material stands out for its exceptional ease of processing in FDM technology, exhibits minimal linear shrinkage (around 0.3 to 0.5%), prints at low extrusion temperatures (190 to 220℃), and does not require a heated buildplate. A limitation of PLA material is its low glass transition temperature ($T_g \approx 60$℃), above which it loses rigidity and experiences a drastic deterioration of mechanical properties (loses load-bearing capacity), which disqualifies its use in elements directly adjacent to heat sources.

4.2. Kinematics

The kinematic system of the AL is based on the design of a traditional Cartesian system used in FDM printers, along with cylindrical kinematics, in which one of the linear axes is replaced by a rotary axis. The transformation of the OY axis, which traditionally executes linear movement in the transverse direction, into a rotary axis enables continuous rotation of the cylindrical build drum around the OX axis. The remaining two axes maintain linear motion, providing full freedom of nozzle positioning in the device's workspace.

The execution of linear movements of the OX and OZ axes is based on proven solutions commonly used in RepRap printer designs. The OZ axis utilizes a gantry system, along which a beam supporting the printhead moves vertically. The aluminum profiles of the gantry serve as linear guides, and the drive is achieved using a TR8×8 lead screw connected to a stepper motor via a flexible coupling.

The X axis is driven by a GT2 timing belt, tensioned between a driving pulley mounted on the stepper motor shaft and an idler pulley with a tensioner assembly. The printhead carriage moves along the beam and, similar to the gantry axis, utilizes rollers with 608ZZ bearings.

4.2.1. Rotary Axis Drive

The design of the OY rotary axis drive system requires the ability to mount interchangeable build drums of various diameters, and a mechanical reduction $i_{\text{total}} \geq 64$, essential for achieving sufficient angular positioning resolution. Minimizing mechanical backlash in the drive assembly is critical. The presence of backlash leads to a loss of positioning accuracy and the formation of surface artifacts during frequent changes in the drum rotation direction. In order to preserve maximum holding torque, efforts were made to minimize the system's reliance on stepper motor microstepping.

During the structural design process, efforts were made to achieve a solution with the highest possible mechanical reduction; ultimately, a total mechanical reduction of 16:1 was accomplished, which combined with 8-fold microstepping of TMC2208 drivers provides the required resolution. During holding torque tests, it was found that the degree of mechanical reduction appropriately decreases the motor load; it was able to perform stable operation also in 16-fold mi-

crostepping mode, which provided quieter system operation. The final design features a 256-fold reduction i_{total}, meaning a resolution of 51 200 steps per full revolution of the drum.

Comparative Analysis of Reduction Mechanisms

To meet the requirements of the build drum drive system, in the initial project phase, the necessity to minimize the number of mechanical transitions in the kinematic chain was identified. Each connection between gears or other moving elements introduces additional mechanical backlash accumulating throughout the system. Theoretically, it was possible to achieve the required angular resolution through various combinations of mechanical reduction and motor microstepping degrees, but mechanical reduction was the priority.

Achieving high mechanical gear ratios in single-stage gearboxes requires a significant difference in gear diameters (the ratio of the number of teeth on the driven gear to the driving gear), and due to the limited dimensional precision of FDM printers, which allow reliable manufacturing of gears with a module no larger than approximately 0.75 mm, a substantial increase in gear radius to obtain a sufficient number of teeth would be necessary; this would lead to a bulky solution, preventing a compact design. During the mechanical design planning phase, solutions with significant mechanical reduction were tested; however, as the physical implementation results demonstrated, a large reduction is not necessary, and a solution featuring an 8-fold mechanical reduction paired with 8-fold microstepping operation meets the resolution requirements.

Planetary Gearbox

The first promising candidate considered as a potential reduction mechanism was a planetary gearbox. Planetary gearboxes consist of a central sun gear, a set of planetary gears, and an outer ring gear. All planetary gearbox components are theoretically possible to manufacture using 3D printing technology, and this mechanism offers high gear ratios in a compact form factor. Planetary gearboxes utilize multiple points of contact between gears, which enables the transfer of heavier loads compared to traditional spur gears. The existence of multiple reduction stages introduces the potential for substantial mechanical backlash stemming from the accumulation of clearances in individual gear meshes, which may cause issues taking print inaccuracies into account. Initial experimental tests conducted during the project planning phase using a publicly available 37:1 ratio planetary gearbox model [18] showed that this system was characterized by angular backlashes far exceeding acceptable limits for use in the precise positioning of the printer's rotary axis.

Worm Drive

Another analyzed solution was a worm drive, characterized by its ability to achieve high gear ratio values. A 42:1 ratio worm drive was designed and tested, with the following parameters: module $m = 1{,}25$ mm, pressure angle $PA = 14{,}5°$, number of teeth $z = 42$, and helix angle $HA = 2{,}2°$.

To eliminate mechanical backlash, a backlash compensation mechanism via spring tension was designed, conceptually based on a publicly available project [19]. The mechanism relies on mounting the worm gear in a movable rail, pressed against the gear wheel by a set of springs. The implementation of the described solution did not yield expected results and was ultimately deemed unsuccessful in the context of the project's requirements. The spring tension caused excessive motion resistance in the transmission. Additionally, the use of an Oldham coupling

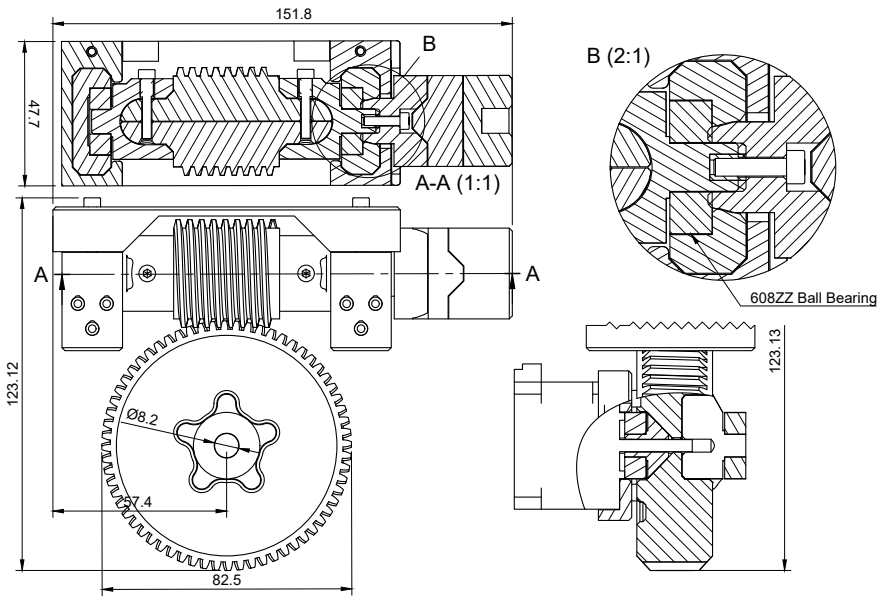

Figure 4.3: Schematic of the manufactured worm drive with backlash compensation

manufactured with FDM technology reintroduced mechanical backlash to the kinematic system, negating the benefits resulting from the elimination of backlash within the worm gear mesh itself.

Two-Stage Belt Drive

The final solution applied in the AL prototype is a two-stage belt drive utilizing GT2 timing belts and pulleys with 20 and 80 teeth. The system consists of two sequentially connected reduction stages, each executing a 1:4 gear ratio, giving a combined mechanical gear ratio of 1:16. The use of 608ZZ ball bearings to support all intermediate shafts and the drum driving shaft ensures smooth rotary motion characterized by low frictional resistance. The low motor load allowed the use of 16-fold microstepping and the *StealthChop* operating mode of the TMC2208 drivers, which carries out active virtual smoothing of the current curve. A schematic of the belt drive is presented in figure 4.4.

The tension adjustment of the driving belts consists of shifting the drive shaft along the aluminum profile. The position of the stepper motor driving the first reduction stage and the position of the build drum drive can be adjusted individually, which allows controlling the tension degree of individual belt segments.

4.2.2. Printhead Design

In classical Cartesian printers, the nozzle position in the build plane is unambiguously defined by the coordinate system; in the AL configuration, the nozzle must be in the same plane as the rotation axis of the build drum. Otherwise, the concentricity of the print trajectory will not be preserved, and the nozzle's distance from the working surface will be variable during drum rotation. Therefore, equipping the printhead with a mechanism enabling nozzle position adjustment along the OY axis direction is necessary. The printhead design is shown in figure 4.6.

The printhead was equipped with a fan cooling the *hotend* heatbreak and a part cooling fan. The purpose of the heatbreak heatsink is to prevent heat propagation up the filament feeding channel. Uncontrolled heating of the upper channel section leads to premature plasticization of

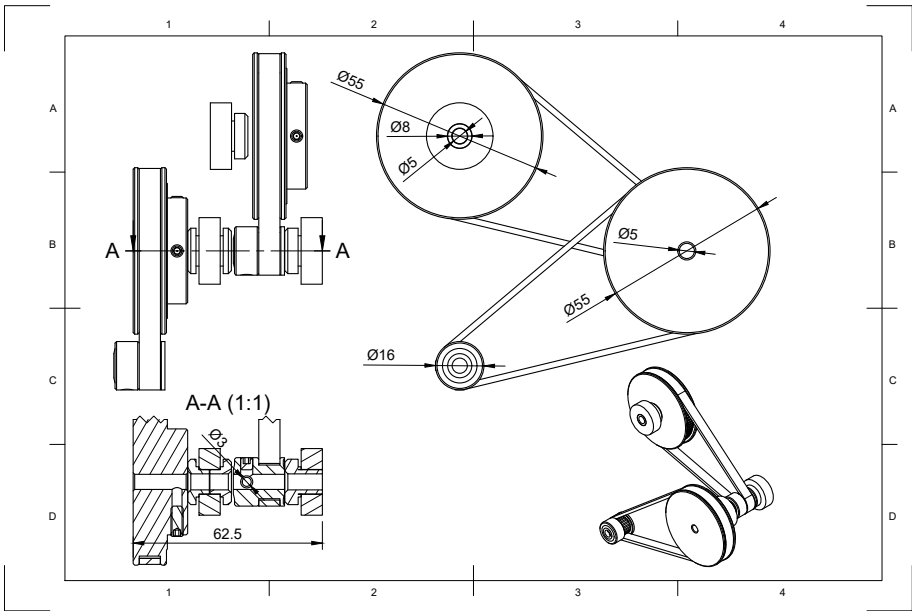

Figure 4.4: Schematic of the belt drive

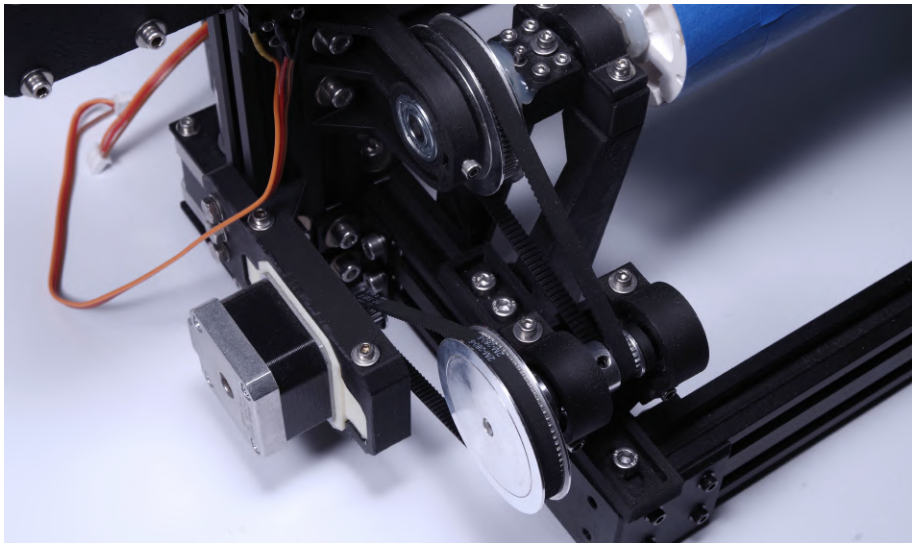

Figure 4.5: Photo of the finished belt drive in the developed prototype

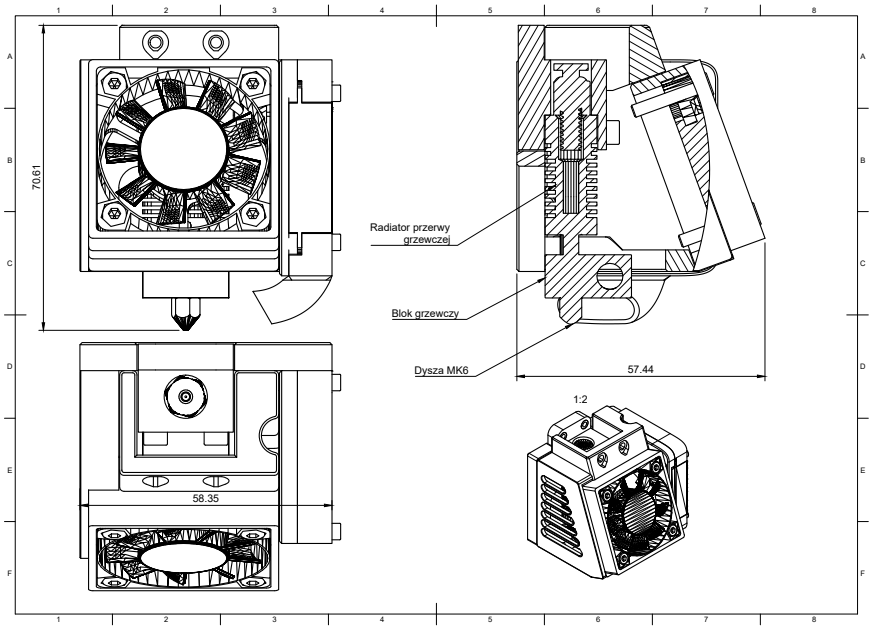

Figure 4.6: Printhead schematic

the filament outside the melt zone, which can result in the feeding channel clogging. The part cooling fan provides cooling to the extruded material immediately after its deposition on the build surface. The air duct directs the airflow directly onto the area just below the nozzle, where the solidification of the extruded material occurs.

4.3. Electronics and Control System

The central control unit functions are performed by the BTT SKR V1.4 Turbo board, featuring a 32-bit ARM Cortex-M3 microcontroller (LPC1769, 120 MHz clock speed) and native Marlin firmware support. The 32-bit architecture and fast processor clock enable more accurate interpolation of cylindrical coordinates at high print speeds or high point densities.

The control of the NEMA 17 stepper motors is carried out by TMC2208 drivers, communicating with the motherboard via the UART interface. The printhead heating system consists of a 40 W heater cartridge. Temperature measurement is performed by an NTC 100k resistance thermistor. The detection of end positions for the OX and OZ axes is handled by mechanical limit switches mounted at points corresponding to each axis's home position, utilized during the homing procedure, which is invoked during printer initialization.

4.3.1. Electrical Wiring Configuration

Four TMC2208 drivers populated in the X, Y, ZA, and E0 sockets were utilized in the printer prototype. In the default configuration, the drivers operate in *legacy* mode, where the microstepping level is set via hardware pins MS1, MS2, and MS3. To activate UART communication enabling software control of driver operating parameters, the factory jumpers shorting pins MS1, MS2, and RST/SLP must be removed, and then a jumper placed on pin MS3, setting it to a high state (logic 1). The UART setup in TMC2208 drivers allows for bidirectional data exchange with the integrated circuits, including setting the reference current, selecting the operating mode, and conducting a diagnostic readout of the drivers' condition.

Electrical connections between the control board and the printer's actuation components are presented in figure 4.7

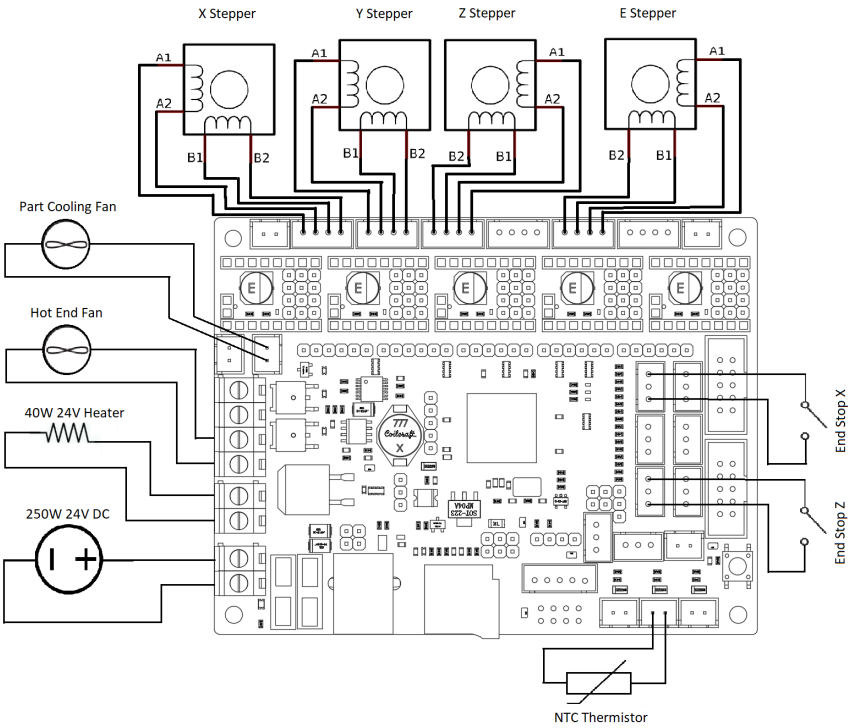

Figure 4.7: Printhead schematic

The extruder heater cartridge is connected to a PWM-controlled output labeled HE0, with the NTC 100k thermistor wired to the TH0 analog input. The OX and OZ axes' limit switches are hooked up to the respective X-STOP and Z-STOP inputs. The system's power is supplied by an external 24 V DC, 250W switching power supply. Temperature regulation is handled by a PID controller built into the Marlin firmware, which, based on temperature readings from the thermistor, modulates the power delivered to the heater by controlling the duty cycle of a PWM signal.

The BTT SKR V1.4 Turbo board features only one dedicated controllable output for a fan, which is used by the part cooling fan, labeled FAN0. The lack of a second dedicated output for the *heatbreak* heatsink cooling fan was resolved by connecting this fan to the HE1 port, typically intended to power a second extruder heater in setups with two independent extruders.

4.4. Marlin Firmware Implementation

The implementation of cylindrical kinematics in the AL prototype required substantial modifications to the control firmware configuration compared to a standard Cartesian printer setup. Marlin firmware 2.1.2.5 [20], an *open source* solution offering native support for the BTT SKR V1.4 Turbo board, was chosen as the foundation of the control system. The OY axis, traditionally handling transverse linear translation, was converted into a rotary axis, facilitating the continuous rotation of the cylindrical build drum about the OX axis, while the OX and OZ axes retained their linear nature, carrying out transverse printhead translation and vertical gantry movement, respectively.

Marlin Firmware Adaptation for Polar Coordinates

Applying polar kinematics configuration in Marlin firmware requires enabling the `#define POLAR` preprocessor directive in the `Configuration.h` configuration file and defining rotary axes. The POLAR module is by default suited for Cartesian printers with a circular printbed, but its embedded mechanisms can be utilized in the AL geometry. Activating the POLAR module introduces an additional mode interpreting coordinates as rotation angles expressed in degrees, scaling tools dedicated to angular coordinates, and extra safeguards against singularities near the rotational axis.

Unlike linear-motion axes, a rotary axis configured in polar kinematics lacks the requisite of a mechanical home position. Because a rotary axis carries out continuous motion (without mechanical limits), a reference point in the form of limit switches is non-existent. Angular position is a relative variable, and the drum can perform multiple complete revolutions in both directions without restriction. By setting `Y_HOME_DIR` $= 0$, the firmware is signaled that the OY axis need not be homed when executing the `G28` command; this eliminates the necessity of a physical limit switch for this axis and enables skipping the Y-axis entirely during the system initialization sequence. To facilitate unrestricted drum rotation in both directions, it was necessary to designate the range of movement for the OY axis as practically infinite by assigning extreme values to the software boundaries: `Y_MIN_POS` $= -999\,999$ and `Y_MAX_POS` $= 999\,999$.

The TMC2208 drivers were set up for an operating mode making use of UART communication. Configuring the drivers takes place via altering the `Configuration_adv.h` file, which contains advanced software settings absent in the primary configuration file. This mode permits programmable control over the stepper motors' operational parameters, which include fine-tuning the reference current restricting the current drawn by motor windings, and direct interfacing with drivers to enable internal measurements and issue diagnosis. The *StealthChop* operating mode was tapped; this incorporates microstepping virtualization, securing silent operation by neutralizing current oscillations across the coils. Moreover, the *StealthChop* mode dynamically curates the holding current factor, ultimately unlocking an amplified effective holding torque absent the jeopardy of frying motor windings or the controlling circuitry.

As highlighted in the previous section, the non-standard usage of the HE1 port (second extruder heater port) to manage the *heatbreak* heatsink cooling fan hinges on resetting output pin assignments in the software configuration. In the vanilla configuration of the BTT SKR V1.4 Turbo board, the HE1 port points to microcontroller pin P2_04 and assumes the role of a heater control output. Transforming this port into a controllable fan output (FAN1) entails factoring corresponding preprocessor directives into the `pins_BTT_SKR_V1_4.h` blueprint, which anchors hardware pin layouts pertaining to a given mother board.

Operating Parameters Calibration

After compiling and flashing the modified firmware onto the BTT SKR 1.4 Turbo control board, conducting the following calibration protocols is mandatory: verifying and dialing in the correct rotary directionals for stepper motors, calibrating steps per linear displacement unit metrics uniformly along all axes alongside the extruder, and discerning the optimal PID controller settings retaining the requested heater temperature. Linking up with the printer was executed using the Pronterface software tool [21] – a graphical user interface facilitating absolute dominion over the printer setup through transmitting G-code commands and granting real-time hardware status su-

pervision capitalizing on the USB interface.

The foundational steps-per-unit calibration procedure relies on issuing a movement demand encompassing a known threshold, gauging the physical translation attained, and deducing a corrective scalar to compensate for the divergence demarcating physical translation and nominal scope. Harnessing the rotary OY axis calibration drill as a textbook example, within relative positioning bounds (`G91`), a `G1 Y360 F600` macro was executed - manifesting a complete 360° turn paired with a 600°/min angular feed rate ceiling. Subsequent to motion cessation, discrepancies splitting the commanded rotation angle (360°) and the empiric measured span θ_m, functioned as determinants to trace out the corrective multiplier bounded by the underlying equation:

$$\text{steps}_{\text{new}} = \text{steps}_{\text{old}} \times \frac{360°}{\theta_m},$$

where θ_m signifies the real-world measured rotation breadth characterizing the build drum. The readjusted steps count is funneled toward the logic deck via the `M92 Y[value]` configuration vector and ingrained permanently onto the EEPROM fabric nestled within the driving board's bounds leveraging the `M500` directive. An analogous methodological setup governed the linchpin calibrations tracking linear OX and OZ axes, intertwined with the extruder, wherein the primary test proxy manifested as the linear filament length hauled straight into the extruder body.

The PID controller is tasked with locking in a stable extruder heater temperature bounded by rock-bottom control error waverings. Tuning maneuvers embarked upon vanilla control constants paired with a cartridge heater governed by an NTC 100k thermistor: $K_p = 22{,}2$; $K_i = 1{,}08$; $K_d = 114$. Directly following this, the PID autotuning operation sequence ignited off the back of the `M303 E0 S210 C5` invocation, compelling the heater block to march through five complete heating and cooling cycles bound for a target core temperature mapping to 210℃. The autotuning algorithm gauges the thermal elasticity of the heating block array through recording warm-up spans, peak overshoot margins, cooldown decay rates, and sweeping thermal ripple amplitudes. Anchored upon harvested metrics, tapping the Ziegler-Nichols optimization stratagem sets out the K_p, K_i, and K_d variables.

Upon completing the *PID autotuning* procedure, the obtained controller parameters $K_p = 27{,}65$; $K_i = 2{,}50$; $K_d = 76,35$ were saved in EEPROM using the `M301 P9.25 I0.41 D52.70` command. The principal visible change in parameters was a significant increase in the integral gain, which assisted in the elimination of the steady-state error. The system's step response exhibits no overshoot or oscillation, and the settling time to reach the target temperature of 210℃is 2 minutes and 27 seconds.

5. MANUFACTURING CAPABILITIES AND APPLICATIONS

Designing with consideration to the specific production process is a natural requirement in manufacturing engineering, applying to every production method used in industry. In FDM technology, the most frequently noticed process limitation is the characteristic layered surface texture of printed elements; material restrictions are also important, as this technology is almost exclusively limited to processing polymer materials.

5.0.1. DfAM in Cartesian 3D printing

The most important criteria for evaluating functional parts made in FDM technology are: mechanical strength, material durability, and dimensional accuracy with faithful reproduction of the designed geometry. The DfAM subsection is dedicated to the most important design issues in the context of Cartesian 3D printers.

Elements manufactured using the FDM method are characterized by high sensitivity to process parameters that control material deposition during production. In a comprehensive literature review [22], researchers identify the process parameters that exert a dominant influence on the mechanical properties of printed parts: build orientation, raster angle, and layer thickness. ”Build orientation in the Z direction proved to be the most dominant factor for tensile strength” – studies conducted by the authors show that flat orientation provides the highest values of tensile strength in the XY plane and bending in the OZ axis. Raster angle, representing the orientation of material fibers relative to the direction of load application, exerts a significant impact on strength – ”raster angles with a higher fraction of the sample oriented along the load axis (e.g., 0°orientation) exhibit improved tensile and compressive strength, while a 90°angle causes significant structural weakening, as the load is transferred through weaker interlayer bonds.” Another important printing parameter is layer thickness, which inversely affects the number of layers and improves the visual print quality. Increasing the number of layers significantly increases production time, and consequently costs, however, its impact on mechanical properties is not unequivocally established: ”thinner layers lead to better bonding between adjacent material lines due to a higher temperature gradient supporting polymer diffusion”, however ”an increased number of layers leads to more cooling and heating cycles, resulting in the accumulation of residual stresses”.

In FDM technology, there is a possibility of manufacturing elements with variable internal infill, which allows for a reduction in printing time and material consumption while maintaining required mechanical properties. Experimental studies [23] show that the main source of the structural strength of printed parts are perimeter parameters (ang. *perimeters*) and the number of top and bottom layers, not the percentage of the element’s internal infill. In engineering practice, this means that functional parts are usually designed with moderate internal infill of 30 to 40% and an increased number of perimeter walls (4 to 6 lines).

Since material consumption is determined to a much greater extent by the side surface area of the part rather than its volume (resulting from the low percentage of internal infill), increasing the body’s volume does not cause a proportional increase in filament consumption. On the contrary, volume-reducing operations such as cutting smaller bodies out of larger ones, introducing holes or reinforcing ribs, lead to an increase in the total side surface area, and thereby to an increase in the number of outer walls and actual material consumption. Therefore, for components

designed for FDM printing, geometries with a larger volume and minimized side surface area are preferred, which is the reverse of the design strategy used in injection molding, where the goal is to minimize material volume by using thin walls and reinforcing ribs with a large surface area.

Ensuring required strength

The weakest link of elements manufactured using the FDM method is the interlayer bond strength. Due to the additive nature of the process, subsequent material layers are deposited successively onto the surface of previous layers, which have already undergone partial solidification and cooling below the polymer's flow temperature. Under such thermal conditions, polymer chains of the newly applied material layer are unable to form strong intermolecular bonds with the material of the underlying layer. The processes of chain diffusion across the interlayer boundary and their entanglement are significantly limited compared to the monolithic material obtained in injection molding, which achieves isotropic properties. In practice, this means that the tensile strength in the direction perpendicular to the layer planes is several times lower than the strength in the direction parallel to the extruded lines within a single layer. This introduces the necessity of designing the part's orientation considering the directions of the main operational loads.

The main source of structural strength of FDM parts is not the internal infill (ang. *infill*), but the number of outer perimeter walls and the top and bottom layers covering the element. Increasing the number of perimeter walls causes a significant increase in bending and tensile strength with a relatively small increase in printing time and material consumption.

A less common case is subjecting FDM elements to compressive stresses. Compressive strength depends mainly on the internal infill. To increase the load-bearing capacity of an element working under compression, it is recommended to increase the internal infill percentage, even to values around 50 to 80%. Mechanical characteristics also depend on the infill pattern. If an element is subjected to compression along one dominant direction, orthogonal patterns are the most effective, such as grid (ang. *grid*) or triangular (ang. *triangular*), which provide continuous material columns oriented according to the load direction. In the case of elements loaded with compression from multiple directions, using isotropic patterns, such as cubic (ang. *cubic*), is recommended. If the priority is to minimize mass and material consumption while maintaining acceptable strength, the optimal choice is the gyroid pattern (ang. *gyroid*). The gyroid pattern is a three-dimensional minimal surface characterized by a maximum ratio of volume filling to side surface area [24].

Geometric limitations

Another limitation of the FDM process is the inability to deposit material in a space lacking a substrate. Extruded material is in a partially liquid state and requires a substrate on which it can settle and solidify in a controlled manner. Geometric stability requires that every newly applied material layer be supported by the layer below it.

Supported surfaces possess textural artifacts whose amplitude often exceeds the height of a single print layer. These defects prevent precise fitting of elements and require additional finishing machining operations. Furthermore, the process of removing support structures is time-consuming (usually impossible to automate) and carries the risk of damaging the actual part.

Figure 5.1: Example of an arch with arcades printed on the implemented cylindrical printer.

Layered surface structure

A characteristic visual artifact of parts manufactured by the FDM method is the visible layered surface structure. Vertical discretization manifests in two forms depending on the surface inclination angle relative to the print plane. Surfaces with a small inclination angle emphasize the staircase effect, in which a smooth surface is approximated by a series of discrete material layers. On surfaces with a large inclination angle, the staircase effect disappears, but the characteristic print layer lines remain visible.

Reducing the thickness of a single layer leads to a decrease in the amplitude of steps on sloped surfaces and a reduction in the visibility of layer lines on vertical surfaces, although it translates to a proportional increase in print time. Moreover, the problem cannot be completely eliminated without a fundamental change in the part's orientation in the printer's workspace. Choosing the part's orientation in such a way that curved planes are oriented vertically relative to the layer plane minimizes the staircase effect.

5.0.2. DfAM in cylindrical 3D printing

Design principles concerning Cartesian 3D printers are largely applicable in cylindrical geometry. The main DfAM changes stem from the radial manufacturing direction, and the designed geometry must also account for the presence of an inner cylinder. The interior can be a cylindrical hole, or a rod constituting an integral part of the printed element.

Fully utilizing the potential of AM requires adapting the slicing strategy and toolpath planning to the specifics of rotational geometry. During the manufacture of a part, for example shaped like a spring, in cylindrical geometry the natural material deposition trajectory is an array of helices wound around the drum's axis. Such an approach means layer-by-layer application of successive spiral turns in an identical angular orientation, where the raster angle between subsequent layers is $0°$. In this case, the extrusion paths are perfectly parallel and lie one on top of the other without any crossover, which results in weakening of the internodal adhesion and delamination of the structure along the layer boundary.

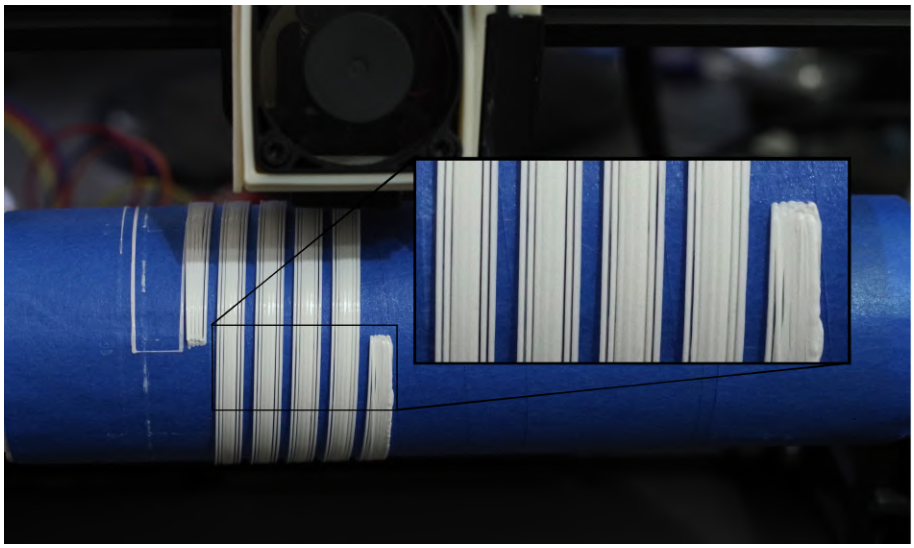

Figure 5.2: Gaps in the structure of conformal layers visible during the printing of a spring on the implemented cylindrical printer. The printing process did not require the use of support structures.

One way to limit this problem is the appropriate arrangement of successive layers. Suboptimally distributed layers resemble a simple cubic geometric packing of atoms, each subsequent path is applied directly onto the path below, which causes the formation of voids, and in the critical case, gaps visible in Figure 5.2. Using a layer arrangement reminiscent of a face-centered cubic (FCC) lattice allows for filling the interlayer spaces and avoiding layer delamination. Implementing such a solution in practice requires introducing a linear offset of successive layers by a value corresponding to $-1/4$ of the extrusion path width for odd layers and $+1/4$ of the path width for even layers. The FCC-style arrangement improves the mutual complementarity of layer geometries and minimizes the formation of interlayer voids 5.3, but it does not eliminate the fundamental problem of a zero raster angle between successive layers.

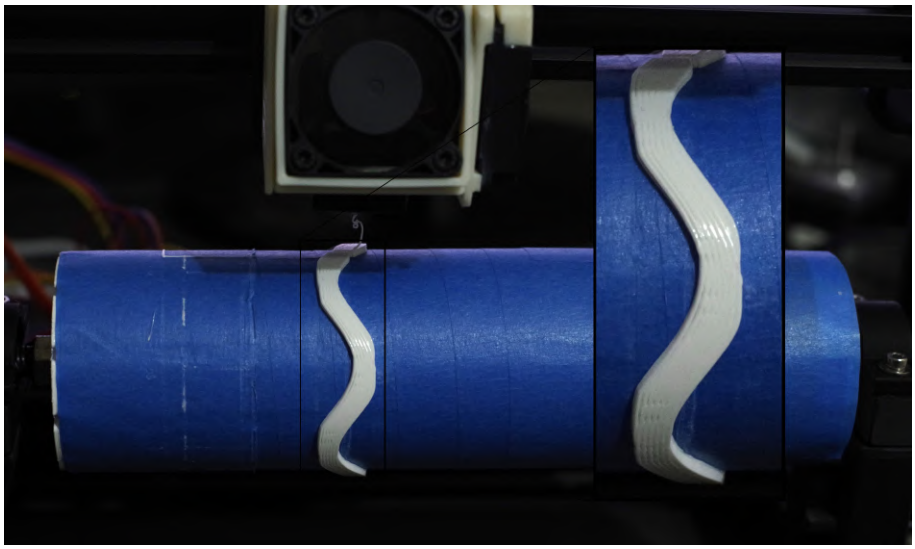

Figure 5.3: Surface of a bracelet with visible elimination of gaps, thanks to the FCC method.

Achieving the full mechanical strength of the print requires the use of alternating fiber directions, analogous to the technique used in Cartesian 3D printing. Due to the geometry, rotating

the helix line will cause the segmentation of the segment into many smaller sections, complicated in mathematical description.

5.1. Unique geometric advantages

Traditional turning geometries characterized by axial symmetry are expanded by the range of design capabilities of 3D printers. The additive process allows for the creation of internal structures, non-rotational surfaces, and complex spatial geometries. The AM system is characterized by the ability to manufacture both Cartesian geometries and solids of revolution.

5.1.1. Continuity of rotation

Continuity of rotation is, first and foremost, a necessary condition for the proper manufacture of helical figures; however, it also offers strength advantages for standard elements. The continuity of internal infill paths, braided around the working cylinder, combined with algorithms generating infill patterns that implement the crossover of successive layers, enables achieving material properties close to isotropic properties. Unlike standard Cartesian printing, where a cylindrical figure consists of a series of linear path segments, a cylindrical printer allows material deposition in the form of continuous spirals wound around the rotational axis, eliminating discontinuities associated with transitions between successive segments.

Trajectory continuity can also be used in the ironing operation for solids of revolution. Ironing consists of continuously moving the heated printer nozzle while simultaneously extruding a small amount of material, which leads to smoothing the outer surface of the part. In cylindrical kinematics, it enables obtaining an outer radial surface free from layered artifacts typical of the standard FDM process.

5.1.2. Manufacturing of internal geometries

Subtractive processes, such as turning, rely on removing excess material from a solid raw material. Removing material from the internal areas of a part is physically impossible without first removing the outer layers. Since FDM printers build an element layer by layer from the base, it becomes possible to create arbitrary internal geometries, such as tunnels, channels, internal threads, closed chambers, and other structures inaccessible to machining tools. One type of internal geometry commonly used in FDM printers is the infill pattern. Infill allows the removal of excess material from the print's interior, which leads to reduced material consumption, faster production times, and decreased part mass.

5.1.3. Avoiding supports

Changing the part's orientation relative to the build direction is the most effective way to avoid support structures. Some geometries are impossible to print on a Cartesian printer without using supports due to exceeding the allowable overhang angle. The unique geometry of a cylindrical printer allows the use of alternative spatial orientations, which in many cases allow for the complete elimination of support structures.

A commonly cited example in the literature for minimizing the need for supports are propellers. If a segment of a propeller blade profile is characterized by an excessive overhang angle, exceeding the technological capabilities of a Cartesian printer, it is necessary to use support structures under the bottom surfaces of the blades. In a cylindrical printer, the natural orientation

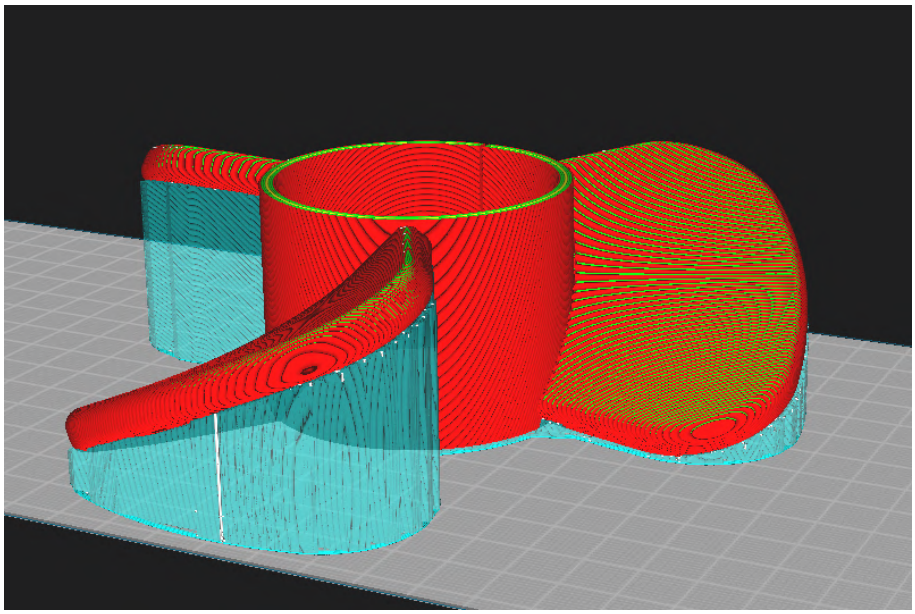

Figure 5.4: Propeller geometry with supports, Ultimaker Cura screenshot

of the propeller coincides with the rotational axis of the working drum, and the blades are built in a radial direction from the outside.

An analysis of the estimated propeller production time was conducted using Ultimaker Cura software for identical print settings. The geometry of the propeller intended for a Cartesian printer required the generation of support structures (automatic generation of structures for an overhang angle above 45°). The geometry intended for the cylindrical printer did not generate any supports; a detailed comparison is presented in Table 5.1.

Table 5.1: Comparison of estimated print time and percentage distribution of operations

Operation	**Cartesian**		**Cylindrical**	
	Time	Share [%]	Time	Share [%]
Internal infill	46 min	12	56 min	21
Inner walls	47 min	12	34 min	13
Outer walls	30 min	8	25 min	10
Retractions	24 min	6	15 min	6
Top/bottom surfaces	1h 40min	25	1h 44min	39
Support structures	1h 18min	20	–	–
Travel moves	1h 12min	18	29 min	11
Total time	**6h 42min**		**4h 26min**	

The total production time of the cylindrical geometry is 4 hours and 26 minutes, 2 hours and 16 minutes shorter than the time for Cartesian printing, which is 6 hours and 42 minutes. The main time savings come from the complete elimination of time devoted to manufacturing support structures, which amounted to 1 hour and 18 minutes, or 20% of the total process time. The elimination of structures also caused a significant reduction in the time of travel moves. In cylindrical geometry, travel takes only 40% of the travel move time in Cartesian orientation. Changes in the time of other print operations arise from differences in wall and infill planning due to the different orientation. Reduced print time for wall, infill, and top/bottom surface operations means less ma-

terial used, so it should not be taken into account for the total time savings. Considering only the time devoted to support structures and additional travel moves, the time savings amounted to 2 hours and 1 minute, representing roughly a 31% print time reduction.

6. PATH GENERATION

Manufacturing objects with complex geometry and fully utilizing the specific capabilities of a cylindrical printer requires the application of advanced tool path planning algorithms. In the field of additive manufacturing, there is an extensive ecosystem of specialized *slicer* software, whose task is to convert a three-dimensional CAD model into a sequence of tool paths. These software applications are limited only to planar solutions, in Cartesian or delta kinematics; in the case of cylindrical printer architecture, a widely available solution does not exist.

6.1. Application of Cartesian slicers

The implementation of the Marlin software controlling the cylindrical printer uses the standard G-code format, differing only in the interpretation of the Y coordinate as a rotation angle instead of a linear displacement. Due to the small differences in G-code, there is a theoretical possibility of using tool paths generated by existing *slicers*, such as Ultimaker Cura, Orca Slicer, or Prusa Slicer. The application of such a solution is highly desirable because modern software offers advanced algorithms for optimizing the printing process, an extensive set of configuration parameters, and numerous functions dedicated to improving the quality and efficiency of production.

An alternative approach would be the full adaptation of a Cartesian *slicer* to work in the cylindrical coordinate space, which, due to the complexity of modern solutions, is an undertaking of significant implementation complexity. It would require a thorough modification of the *slicing* engine algorithms and a systematic adaptation of every program function to the specificity of cylindrical geometry. With the presence of hundreds of specialized algorithms responsible for various parts of the path generation process, such an approach becomes highly impractical.

6.1.1. Limitations and side effects

The first side effect of using Cartesian *slicers* in cylindrical printing is the distortion of the object's actual geometry. Direct application of the displacement value in the OY axis expressed in millimeters as a parameter controlling the angular rotation of the cylindrical printer produces geometry curved relative to the curvature of the printer's drum. The object narrows at the base, and as it moves away from the rotation axis, it widens; the distortion is linearly proportional to the increase in radius. The distortion is dependent on the object's orientation; the dependence of distortion on orientation is shown in photo 6.1 containing three test prints of the 3D Benchy model [25]. The first model, which has no distortions, was pre-subjected to a corrective transformation and printed on the implemented cylindrical printer. The traditionally printed models have clear geometric distortions depending on the orientation.

Another directly related problem is incorrect material extrusion parameters. Proportionally to the geometric distortion, the actual demand for the amount of extruded filament changes. The nozzle extrudes material evenly around the rotation axis; the volume of the extruded material is distributed over the lateral surface of a cylinder with area $A = 2\pi r L$, where L is the length along the cylinder's axis. Since the circumference $2\pi r$ increases linearly with the radius, with a constant volume of extruded material, the surface coverage intensity $I(r)$ decreases inversely proportionally to the radius:

$$I(r) \propto \frac{1}{r}. \tag{6.1}$$

Figure 6.1: 3D Benchy test print, left print - distortion correction, middle print - distortion relative to the OY axis, right print - relative to the OX axis

The *slicer* generates commands for extruding the same amount of material regardless of the radius of the trajectory's curvature. The problem cannot be solved by scaling the extrusion volume using a scaling factor that is a function of the distance from the rotation axis, because only rotational movements around the OY axis are distorted, while linear displacements along the OX axis remain analogous to movements in a Cartesian printer and do not require correction. Furthermore, the realization of some trajectory segments is carried out using simultaneous movement on multiple axes, which means that individual vector components of displacement generate a complex resultant trajectory with variable curvature.

For movement from point (X_1, Y_1, Z_1) to point (X_2, Y_2, Z_2) in the cylindrical system, a Cartesian *slicer* assumes a rectilinear trajectory in Euclidean space with length:

$$d_k = \sqrt{(\Delta X)^2 + (\Delta Y)^2 + (\Delta Z)^2}. \tag{6.2}$$

Due to the machine's cylindrical kinematics, the ΔY component is realized as an angular rotation, generating an arc movement with a length dependent on the current radius $r = r_d + Z$. As presented in the section regarding the correction of extrusion parameters (equation 6.11), the actual arc length is:

$$s = r \cdot |\Delta Y| \cdot \frac{\pi}{180}, \tag{6.3}$$

where the radius r is constant within a single layer. The actual trajectory length in cylindrical space is therefore the vector sum of linear and arc displacements (equation 6.12):

$$d_c = \sqrt{(\Delta X)^2 + s^2 + (\Delta Z)^2}. \tag{6.4}$$

The ratio of these lengths d_c/d_k is not constant and varies as a function of the radius and the proportion of displacement components. For purely rotational movement ($\Delta X = \Delta Z = 0$), the ratio is $r \cdot \pi/180$, while for purely linear movement along the OX axis, the ratio is equal to one. For mixed trajectories, the correction factor takes intermediate values, which makes it impossible to apply a global, constant scaling factor for extrusion.

The last limitation is the lack of topological continuity at the transition from 0 to 360 degrees. Modern software implementations for Cartesian printers operate in Euclidean space, where

the transition between coordinates X and $X + \Delta X$ requires visiting all intermediate values in accordance with the property of function continuity. The cylindrical projection of a cylinder onto the XY plane requires "cutting the cylinder," which results in the loss of topological continuity. Using the full surface of the cylinder during path generation is still possible, however, software algorithms do not take into account the possibility of a continuous transition through the $0°/360°$ boundary when generating tool paths.

The failure to account for continuity causes problems when manufacturing geometry with a spiral topology, e.g., helical springs, and also negatively affects the mechanical strength of manufactured parts. For example, for the shape of a torus in the cylindrical coordinate space, which after transformation to Cartesian space (by cutting and unfolding onto a flat surface), can be represented as a cylinder (ignoring the distortions caused by the varying distance from the axis of rotation), the *slicer* algorithm generates circle-shaped walls at the bases of the cylinder. This cylinder has two such bases at coordinates $0°$ and $360°$, treated as separate elements. Production of such geometry on a cylindrical printer results in a raster angle at the coordinate transition equal to 0 degrees, which means arranging the extrusion lines perpendicular to each other and abandoning the interlacing of polymer bundles between layers. As discussed in the previous chapter, proper bundle interlacing is one of the key factors determining the mechanical strength of parts manufactured using the FDM method.

6.1.2. Solutions to limitations

Limitations resulting from geometric distortions are not dependent on how the *slicer* works, which enables the development of algorithms to compensate for these distortions within the software implementation. Problems related to topological continuity would require interference in the algorithmic structure of *slicers*, which is beyond the scope of the project. Nevertheless, the solution relying on geometric distortion compensation combined with limited continuity support preserves a significant part of the theoretical functionality of the cylindrical 3D printer.

Correction of geometric curvature

The geometric curvature correction algorithm performs a transformation of the CAD model in a way that compensates for the distortions occurring during the cylindrical printing process. This transformation can be described mathematically as follows:

For a pair of points defined in the Cartesian spatial coordinate system as (x_1, y_1, z_1) and (x_2, y_2, z_2) with relative position $(\Delta x, \Delta y, \Delta z)$, there is a corresponding pair of points (x_3, y_3, z_3) and (x_4, y_4, z_4), which, after a pair of preliminary transformation operations and a transformation to the cylindrical coordinate space, has an identical relative position $(\Delta x, \Delta y, \Delta z)$. The preliminary transformation operation performs the inverse transformation to the unfolding transformation to cylindrical geometry.

For a single input point (x_i, y_i, z_i) in the Cartesian system, the radius from the rotation axis is expressed as:

$$r_i = \sqrt{y_i^2 + z_i^2}. \tag{6.5}$$

The angle in the polar system is calculated using the two-argument arctangent function:

$$\theta_i = \arctan 2(y_i, z_i). \tag{6.6}$$

After taking into account the cutting position on the cylinder, defined as angle θ_c, the transformed

angle is expressed by the formula:

$$\theta_i' = \theta_i - \theta_c, \tag{6.7}$$

where the value is then normalized to the range $[0°, 360°)$. The height above the surface of the drum with radius r_d is:

$$z_{i,\text{cart}} = r_i - r_d. \tag{6.8}$$

The coordinates of the point transformed for *slicing* in the Cartesian program take the form:

$$\begin{cases} x_{i,\text{cart}} = x_i \\ y_{i,\text{cart}} = \theta_i' \\ z_{i,\text{cart}} = r_i - r_d \end{cases}. \tag{6.9}$$

The y_{cart} coordinate represents the angle in degrees, which is then handled by the *slicer* as a linear dimension in millimeters. During printing, this value is interpreted by the software controlling the cylindrical printer as the rotation angle, which results in the reversal of the distortion and the reproduction of the original geometry.

Due to the non-linearity of the transformation, the amplitude of which increases with the radius, the model edges require *subdivision* in order to maintain geometric accuracy. An edge is subdivided if any of the following conditions are met:

- linear distance $\sqrt{(\Delta x)^2 + (\Delta z)^2} > L_{\max}$, where $L_{\max} = 2\,\text{mm}$,
- change in arc length $|\Delta y_{\text{arc}}| > L_{\max}$,
- change in angle $|\Delta\theta| > \theta_{\max}$, where $\theta_{\max} = 5°$.

The *subdivision* process is carried out recursively by dividing each triangle into four smaller ones by adding midpoints on each edge until all accuracy criteria are met.

Correction of extrusion parameters

The transformation of the geometry to the Cartesian coordinate system introduces a discrepancy between the actual length of the trajectory in cylindrical space and the length assumed by the Cartesian *slicer*, which subsequently generates incorrect extrusion values. The extrusion parameter correction algorithm compensates for this discrepancy by recalculating the extrusion values in the generated G-code.

For a movement between two points (X_1, Y_1, Z_1) and (X_2, Y_2, Z_2), where Y represents the angle in degrees, the Cartesian *slicer* calculates the distance as:

$$d_k = \sqrt{(\Delta X)^2 + (\Delta Y)^2 + (\Delta Z)^2}, \tag{6.10}$$

treating ΔY as a linear change of coordinate in millimeters.

The actual distance in cylindrical space requires considering the curvature radius. For an angle change ΔY expressed in degrees, the arc length on radius r is:

$$s = r \cdot |\Delta Y| \cdot \frac{\pi}{180}, \tag{6.11}$$

where the radius $r = r_d + Z$ is constant within a single layer (movement within the layer maintains a constant Z value). The actual trajectory length in cylindrical space is given by the formula:

$$d_c = \sqrt{(\Delta X)^2 + s^2 + (\Delta Z)^2}, \tag{6.12}$$

The amount of extruded material should be proportional to the actual length of the trajectory. The *slicer* computes the extrusion value E_o based on distance d_k, so the extrusion coefficient per unit length is:

$$k_E = \frac{E_o}{d_k}. \tag{6.13}$$

The corrected extrusion value for the actual cylindrical distance is calculated as:

$$E_k = k_E \cdot d_c = E_o \cdot \frac{d_c}{d_k}. \tag{6.14}$$

The algorithm parses the G-code file line by line, identifying movement commands `G0` and `G1` that contain an extrusion parameter E that is not a retraction extrusion component. For each such command, it computes the correction factor d_c/d_k and substitutes the original value of parameter E with the corrected value E_k.

6.1.3. Description of design using the proposed method

The process of designing parts intended for manufacturing on a cylindrical printer using Cartesian *slicers* consists of the following stages:

Design in CAD software. The designer creates a three-dimensional model in the target dimensions, designing the geometry around the cylinder's axis of rotation. The model represents the actual shape the object is supposed to have after printing on a cylindrical printer.

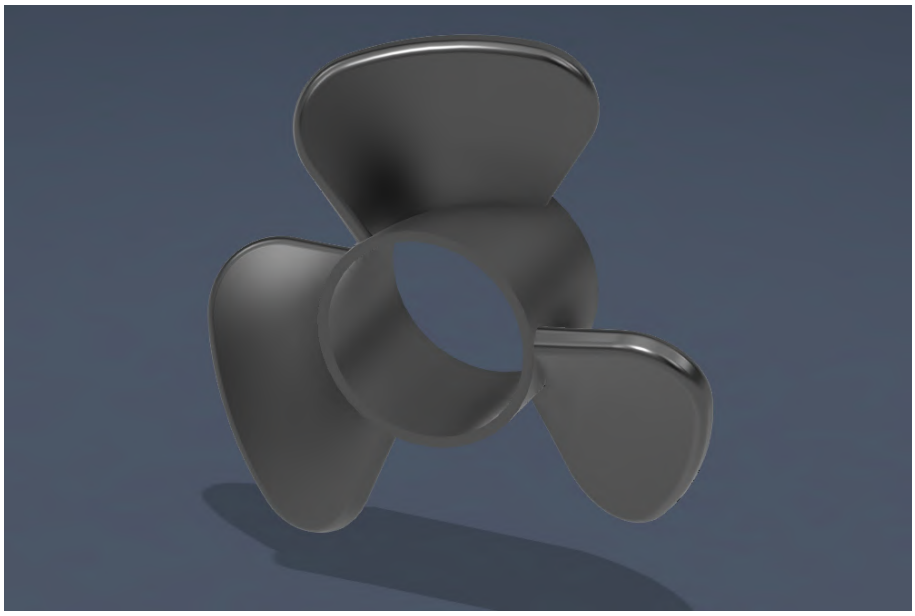

Figure 6.2: Propeller CAD design in Autodesk Fusion 360

Geometric conversion. The model is exported to STL format, and then subjected to transformation using the Python script `cylindrical_to_cartesian.py`. This process performs the inverse unfolding of the cylindrical geometry.

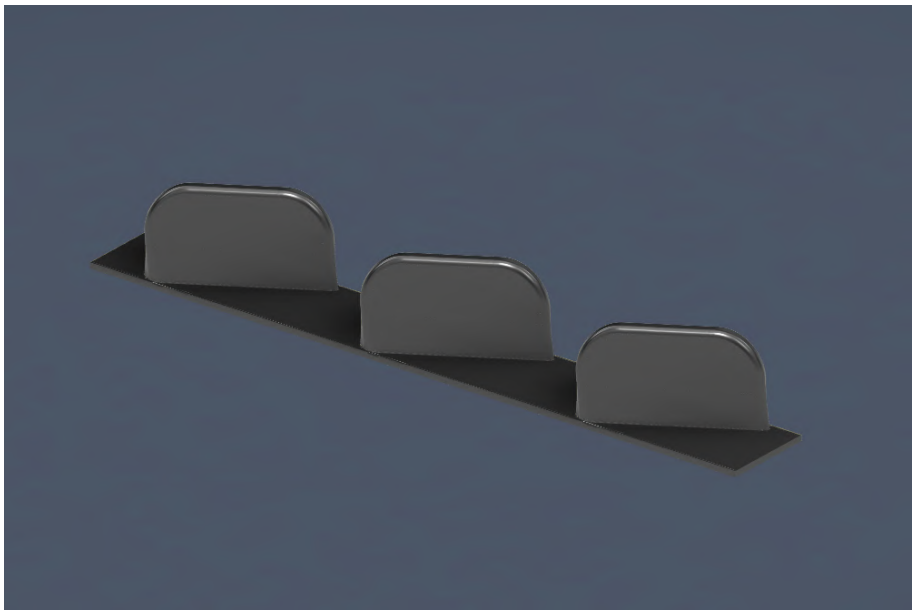

Figure 6.3: Propeller geometry after inverse cylindrical transformation

Tool path generation. The transformed model is imported into a *slicer* (e.g., Cura), where the standard procedure of generating tool paths is performed using the software's full functionality. It is necessary to create a profile representing the available dimensions of the build plate after unfolding the cylinder.

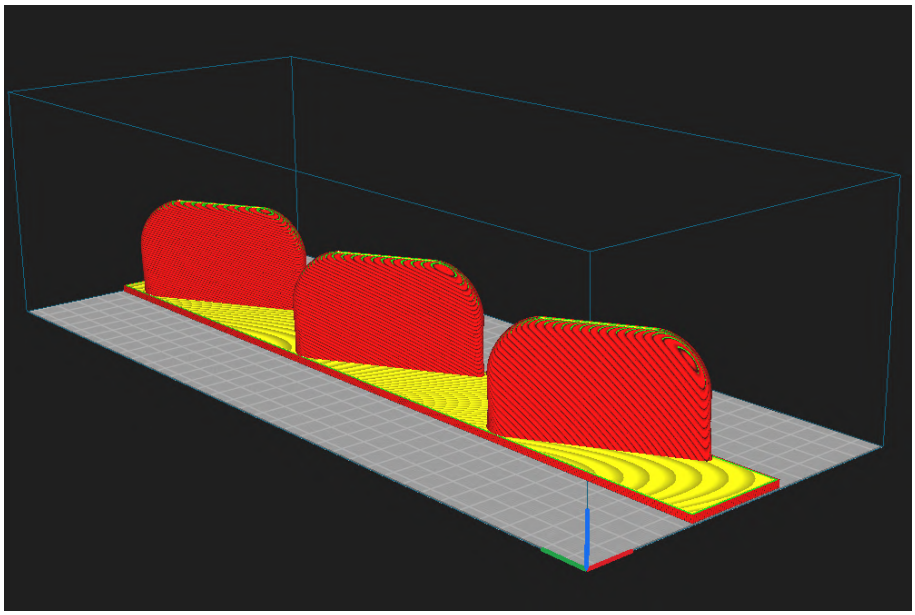

Figure 6.4: Path generation in Ultimaker Cura

Correction of extrusion parameters. The generated G-code file is processed using the Python script `recalculate_extrusion.py`, which recalculates the extrusion values according to the actual trajectory length in cylindrical space. After this operation, the G-code is ready for execution on the cylindrical printer.

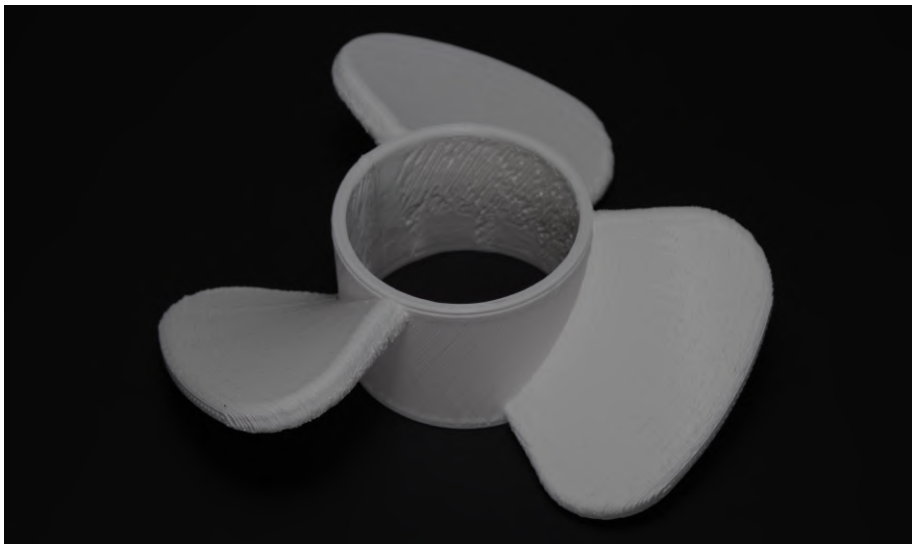

Figure 6.5: Photo of a propeller printed using the implemented cylindrical 3D printer

6.1.4. Conclusions from the application of Cartesian slicers

For geometries whose angular span falls within a range of less than a full rotation ($< 360°$), the use of a standard Cartesian *slicer* in conjunction with the presented method of geometry transformation and dimensional correction is a solution that achieves capabilities close to the state of the art in path generation for Cartesian printers. Geometry correction ensures the dimensional and geometric fidelity of the manufactured objects.

The presented approach also has the positive side effect of creating non-planar layers when printing Cartesian geometries. The object's layers have a cylindrical profile, and the surface of a cylindrical layer is larger than the corresponding surface of flat layers found in prints from Cartesian printers. The larger layer surface leads to improved interlayer adhesion, while its curved profile enables a more effective stress distribution [26]. These effects can contribute to increasing the mechanical strength of prints, similar to the effects that can be achieved on 4-axis non-planar printers.

For geometries with continuous topology, where it is desirable to utilize continuity at the $0°/360°$ transition to fully exploit the capabilities of a cylindrical printer, the current state of algorithm development does not offer a practical solution. Combining the full functionality of a modern *slicer* with the advantages resulting from the topological continuity of prints on a cylindrical printer is not possible to achieve using the presented method and remains unattainable until the development of a full adaptation of a cylindrical geometry *slicer*.

6.2. Path generation without a slicer

Generating tool paths is not limited exclusively to transforming CAD models using *slicers*. An approach based on direct G-code creation using manual position definition and algorithmic trajectory generation is possible. Methods of this type do not rely on 3D models of elements, but on using mathematical functions or predefined geometric patterns, and allow full control over every aspect of the printing process.

6.2.1. FullControl GCode Designer

A leading tool in the field of algorithmic G-code generation is FullControl GCode Designer [27]. FullControl is *open source* software composed of a set of Python scripts and a *Visual Basic* graphic interface that allows the designer to precisely define each tool movement segment. Trajectory segments can be defined using mathematical functions, which allows the creation of complex parametric geometries, or by using ready-made geometric schemas and procedural algorithms.

6.2.2. Adaptation of FullControl for cylindrical printing

The adaptation of the FullControl software required the development of a cylindrical space module and the modification of the extrusion calculation mechanism. The `fullcontrol.geometry.cylindrical` module provides a set of functions generating trajectories in cylindrical space, which produce `Point` objects from the FullControl library.

- `cylindrical_to_point(x, theta_degrees, radius)` — generation of a single point, where `radius` corresponds to the height above the drum surface (coordinate Z),
- `cylindrical_arc(...)` — arc generation,
- `cylindrical_circle(...)` — generation of a circle with constant position X,
- `cylindrical_helix(...)` — generation of a helix combining linear movement along the axis OX with an angular rotation,
- `cylindrical_spiral(...)` — generation of a spiral with variable radius.

The default material extrusion calculation algorithm was replaced with an algorithm for cylindrical kinematics. The modified `distance_forgiving()` function in the `extrusion_classes.py` module implements calculations according to the formulas presented in the section on the correction of extrusion parameters (equations 6.11 and 6.12). The system automatically scales the amount of extruded material proportionally to the actual length of the trajectory in three-dimensional space, eliminating the need for post-processing the generated GCode.

Creating basic geometries

The FullControl library in conjunction with the cylindrical module enables the creation of complex geometries through the composition of elementary functions. Examples of creating simple structures are presented below:

Cylinder - Creating a cylinder relies on generating a sequence of circles at subsequent positions along the axis OX, with a spacing equal to the extrusion path width. Each circle is created by the `cylindrical_circle()` function at a constant radius corresponding to the height of a single layer over the drum surface.

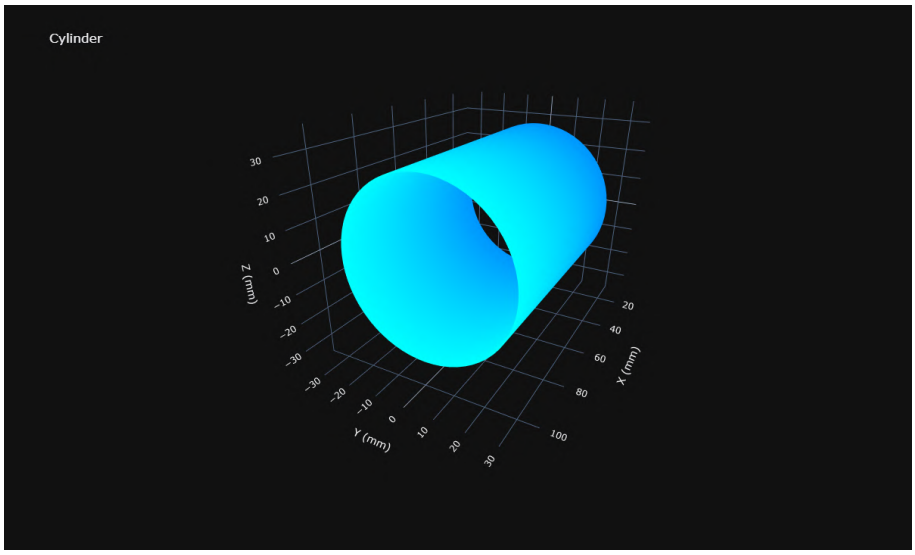

Figure 6.6: 3D visualization of tool paths created using the implemented program, cylinder example

Helical spring - The generation process begins with determination of the parameters for the number of coils, width of the segment in the direction of the axis OX, and spring thickness. The algorithm generates nested loops of helices; the outer loop iterates over the radial layers increasing the radius by the layer height with each iteration; the inner loop generates subsequent helices along the axis OX. In accordance with the DfAM rules discussed in the previous chapter, subsequent layers are alternately shifted by ± 0.1 mm in the X direction in order to obtain a pattern resembling FCC packing. The winding direction of the helices is alternately reversed for subsequent passes, minimizing the extruder's travel movements.

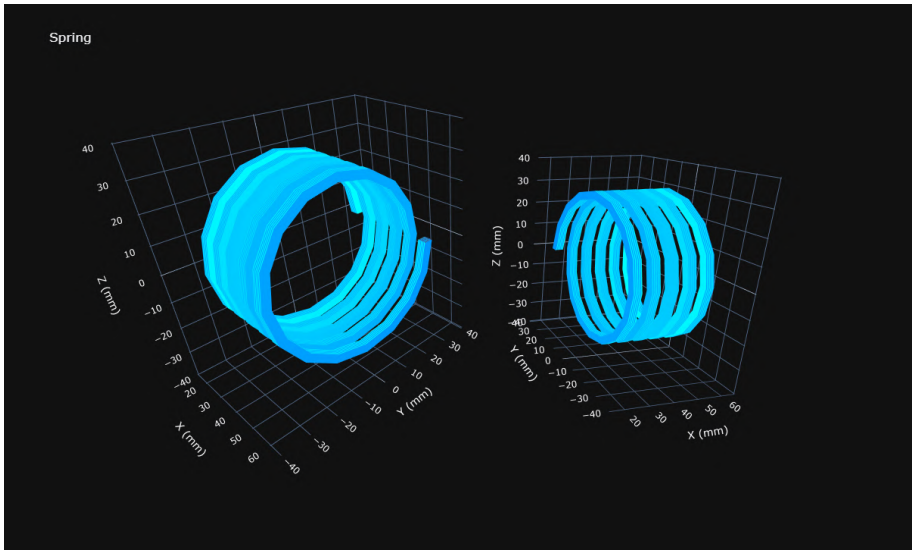

Figure 6.7: 3D visualization of tool paths created using the implemented program, spring example

Bracelet with a wave pattern - The bracelet is realized as a series of circles distorted by a sine function dependent on the angle θ. Similar to the spring case, the structure is built by sequentially applying radial layers, consisting of multiple circles creating the width of the bracelet. The alternating shifting of layers was analogously applied.

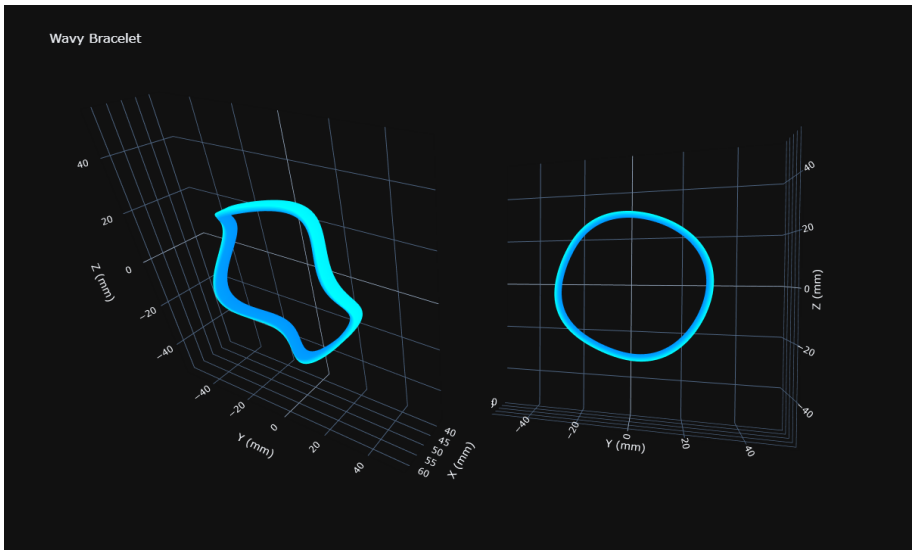

Figure 6.8: 3D visualization of tool paths created using the implemented program, bracelet example

6.2.3. Conclusions from the FullControl adaptation

The FullControl library with the cylindrical extension offers a degree of design freedom going beyond the capabilities of conventional *slicers*. The system allows full exploitation of the specific advantages of cylindrical kinematics, including the natural realization of spiral geometries, helical structures, and continuous trajectories utilizing the topology of cylindrical space without limitations resulting from discontinuities at the boundaries of $0°/360°$.

A limitation of this methodology is the need to define each segment of the tool's trajectory. For complex geometries without a simple parametric representation, the workload associated with the algorithmic description of paths significantly exceeds the time input of the standard CAD design approach combined with the use of a *slicer*. As discussed in detail in the previous chapter in the section devoted to DfAM in cylindrical 3D printing, the mere realization of the desired geometric shape using mathematical functions will not allow for achieving optimal mechanical strength of printed parts. Obtaining an appropriate placement of extrusion paths, ensuring a non-zero raster angle between successive layers and the mechanical interlacing of the deposited material fibers, means the necessity for conscious layer-laying design. Such an approach quickly becomes impractical due to the required time input.

6.3. Existing implementations of simple slicers

A cylindrical *slicer* uses coaxial cylindrical surfaces, the equation of which takes the form $\sqrt{(x-x_c)^2+(y-y_c)^2} = r_i$, where r_i denotes the radius of the i-th layer. Dharmawan and Soh [28] proposed a cylindrical *slicer* methodology based on the conversion of a planar data structure to a three-dimensional data structure in a polar coordinate system. The process begins with standard slicing of the STL model using commercial Autodesk Netfabb software, from which the authors export a set of closed polygons describing the contours of each layer in a Cartesian system. Then the authors construct an $t \times l \times m$ matrix, where t denotes the number of layers along the OZ axis, l represents the number of discrete polar angles θ, and m defines the number of discrete radii r in the radial direction. Each matrix element takes a binary value (1 or 0) indicating whether a given point $P(z, \theta, r)$ is located inside or outside the solid for printing. The results presented by the authors are characterized by a

high degree of discretization causing a visible staircase effect on the print surface, and the applied path laying strategies do not implement layer interlacing, which limits the mechanical properties achieved to a level comparable with the results discussed in 6.2.3.

Zhao and co-authors [3] presented an alternative cylindrical slicing methodology utilizing surface-to-plane mapping. This process starts with generating concentric cylindrical surfaces; the intersection of these surfaces with the triangle mesh of the STL model leads to the extraction of intersection points, used for the reconstruction of contour segments for each curved layer. The authors implemented functions filling the obtained contours, including linear-arc-linear (LAL), helical (H), and circular-linear-circular (CLC). The method of generating paths resembles the presented adaptation of FullControl for cylindrical printing in section 6.2.2, with the only difference being automatic generation of segments based on generated contours. Basic filling strategies (LAL, CLC, H) do not implement layer interlacing fully taking advantage of cylindrical geometry. The authors only demonstrate the algorithm's application on simple 3D object meshes; slicing results for curved geometries with high polygon density have not been presented.

6.3.1. Implementation of the slicer *in the FullControl environment*

The implementation of the cylindrical slicer in the FullControl environment is based on the concept presented by Zhao and co-authors. The implementation has been extended to generate multi-perimeter contour walls and layer infills. The algorithm begins by determining the radial scope of the model by calculating r_{min} and r_{max} for all vertices of the triangle mesh. A series of coaxial cylinders with radii $r_i = r_{min} + i \cdot h_l$ is then generated, where h_l denotes the radial layer thickness (typically 0.2 mm). To account for inaccuracies stemming from the discretization of the triangle mesh, a tolerance band of $\pm 0.5 \cdot h_l$ around the nominal cut radius was introduced, which eliminates problems related to representing smooth cylindrical surfaces by inscribed or circumscribed polygons composed of triangles, analogous to the combination of *inclusive* and *exclusive* tolerances in modern Cartesian *slicers*.

The contour extraction process uses the intersection of each mesh triangle with the cylindrical surface. For each edge of a triangle with vertices possessing radii r_1 and r_2, the intersection point with a cylinder of radius r is determined by the linear interpolation method according to the formula $t = (r - r_1)/(r_2 - r_1)$, where the parameter t is restricted to the interval $[0, 1]$ in order to handle points located near edges. Each triangle intersecting the cylindrical surface generates zero or two intersection points, which are then connected into line segments. The connecting algorithm utilizes a graph structure, where each segment forms an edge, and intersection points represent vertices, to allow correct linking of segments into closed contours while accounting for the cyclicity of the angle θ in the range $[-180°, 180°]$. Graph search identifies the shortest paths connecting individual segments within the matching tolerance distance, which in the implementation was set to 0.5 mm of Euclidean distance in (x, θ) space. By means of a morphological erosion operation, internal perimeters are generated for each obtained closed contour. This process requires a temporary conversion of cylindrical contours $\{r, h, \theta\}$ onto a (XY) plane.

For layers requiring a solid infill *TOP, BOTTOM*, rectilinear infill is generated after performing planar mapping. The algorithm constructs a series of parallel scan lines inclined alternately at an angle of $45°$ or $-45°$, which are then clipped to the surface bounded by the internal wall contour. The alternation of the infill angle between successive layers ensures a $[90°]$ raster angle of the fiber directions. A partial infill mechanism for intermediate layers has not been implemented.

6.3.2. Obtained results

The implementation of the cylindrical *slicer* was tested on the geometry of a propeller, which was used in the Cartesian *slicer* adaptation method. The slicing process of an STL model of a propeller with a diameter of 200 mm, a radial layer thickness of 0.2 mm, and two perimeter walls required generating 365 cylindrical layers. The total time for generating G-code for this model was 827 seconds on a computer equipped with an Intel Core i5-13600KF processor, a significant computational load compared to Cartesian *slicers* (typically 5–10 seconds for comparable geometry). The produced paths presented in figure 6.9 possess a significant amount of missing layers caused by incorrectly generated contours, some of which were not recognized as closed shapes.

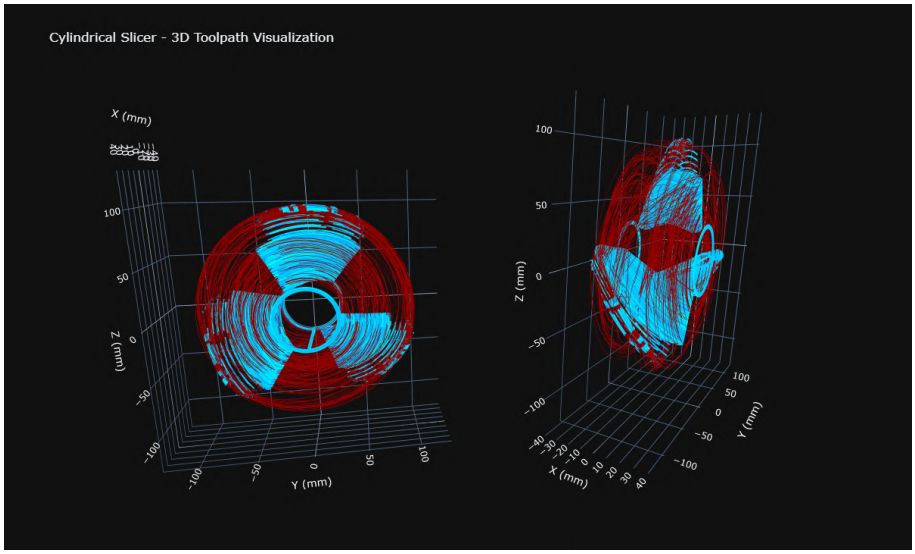

Figure 6.9: 3D visualization of slicer paths generated using the implemented *slicer*, propeller

For simple geometries, satisfactory results and correct GCode paths were obtained, enabling proper prints. The layers with a solid infill achieve extrusion bundle interlacing visible in figure 6.10.

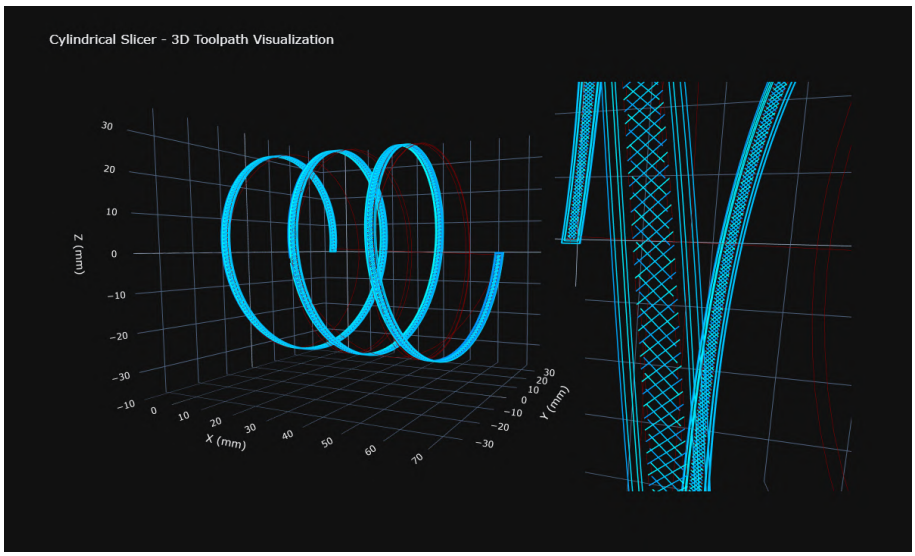

Figure 6.10: 3D visualization of slicer paths generated using the implemented *slicer*, spring, infill close-up

6.3.3. Conclusions from the cylindrical slicer implementation

The core problems of the current implementation are incorrect contour generation, and the computational complexity of the segment connection process. Computational complexity increases quadratically with the number of segments $O(n^2)$ in the checked area. Numerical inaccuracies in the process of intersecting testing triangle meshes with cylindrical surfaces can lead to the occurrence of open contours, which are subsequently rejected by the algorithm. In the case of properly defined contours, the application of a morphological offset to create perimeter walls and an internal area provided the possibility of applying filling strategies used in Cartesian *slicers*.

Further development of the implementation should focus on achieving faithful contour representation, and optimization of the connection algorithm. It is also important to introduce functions such as retractions, infill for the inside of the model, and support structures.

7. RESULTS AND DISCUSSION

7.1. Design of the Cylindrical Printer

The key design conclusion is the effectiveness of mechanical reduction, which allows for increased microstepping operation and enables ensuring the required resolution. The optimal solution is an 8-fold mechanical reduction combined with 16-fold microstepping operation. The solution using belt drives brought the best results among the tested drives. Belt drives provide low angular backlash and simplicity of implementation.

Adaptation of the Marlin software to polar kinematics went without technical complications thanks to the support of the POLAR module. Bed-to-nozzle relative calibration mechanisms proved to be necessary. Especially important is the mechanism for adjusting the nozzle position in the direction of the OY axis. The need for a drum centering mechanism to ensure printing trajectory concentricity was also identified; this requirement should be considered as a standard element in future cylindrical printer designs.

7.2. Toolpath Generation

The conducted research demonstrated the feasibility of three approaches to toolpath generation for a cylindrical printer:

Adaptation of Cartesian *slicers* with mathematical correction of geometric distortions and extrusion parameters turned out to be the most universal solution for complicated geometry. This approach enabled the successful production of a propeller model with the complete elimination of support structures and a 34% reduction in production time compared to Cartesian printing. The disadvantage of the methodology is the lack of full utilization of continuous rotation.

Extension of the FullControl GCode Designer environment with a cylindrical geometry module provided complete control over tool trajectories and enabled the direct generation of helical structures (springs, screws) and geometries described by mathematical functions. The methodology is, however, impractical as it requires the description of each trajectory segment.

Prototype implementation of a dedicated cylindrical *slicer* achieved positive results for geometries with medium 3D mesh complexity (simple objects, springs). The most optimal path generation in terms of mechanical properties was achieved, with multiple perimeter walls and *rectilinear* infill with layer interleaving. Complex geometries with curved surfaces and a large number of polygons posed significant problems.

7.3. Directions for Further Development

The most critical issue hindering the implementation of cylindrical printers is the lack of toolpath generation algorithms. The most practical solution would be to complete the adaptation of a Cartesian *slicer* by ensuring continuous rotation.

The continuation of work on dedicated software for cylindrical *slicing* should focus on:

Improvement of the contour extraction algorithm – implementation of a more robust and optimized contour detection mechanism.

Partial infill strategies – extension of the implementation with algorithms for generating internal infill for intermediate layers (honeycomb, gyroid, adaptive), taking into account the curvature of the cylindrical space.

Print optimizations – implementation of modern print process optimization mechanisms, including: pressure control and vibration compensation combined with *input shaping*.

LIST OF FIGURES

1.1 Photograph of the physical implementation of the cylindrical printer made as part of the project . . . 9

4.1 Render of the created CAD printer project . . . 21
4.2 Structural frame schematic . . . 22
4.3 Schematic of the manufactured worm drive with backlash compensation . . . 25
4.4 Schematic of the belt drive . . . 26
4.5 Photo of the finished belt drive in the developed prototype . . . 26
4.6 Printhead schematic . . . 27
4.7 Printhead schematic . . . 28

5.1 Example of an arch with arcades printed on the implemented cylindrical printer. . . 33
5.2 Gaps in the structure of conformal layers visible during the printing of a spring on the implemented cylindrical printer. The printing process did not require the use of support structures. . . . 34
5.3 Surface of a bracelet with visible elimination of gaps, thanks to the FCC method. . 34
5.4 Propeller geometry with supports, Ultimaker Cura screenshot . . . 36

6.1 3D Benchy test print, left print - distortion correction, middle print - distortion relative to the OY axis, right print - relative to the OX axis . . . 39
6.2 Propeller CAD design in Autodesk Fusion 360 . . . 42
6.3 Propeller geometry after inverse cylindrical transformation . . . 43
6.4 Path generation in Ultimaker Cura . . . 43
6.5 Photo of a propeller printed using the implemented cylindrical 3D printer . . . 44
6.6 3D visualization of tool paths created using the implemented program, cylinder example . . . 46
6.7 3D visualization of tool paths created using the implemented program, spring example 46
6.8 3D visualization of tool paths created using the implemented program, bracelet example . . . 47
6.9 3D visualization of slicer paths generated using the implemented *slicer*, propeller . 49
6.10 3D visualization of slicer paths generated using the implemented *slicer*, spring, infill close-up . . . 49

LIST OF TABLES

3.1 Arc resolution Δs [mm] as a function of radius r and the total gear ratio of the rotary system for a NEMA 17 motor 18
3.2 Total positioning error $\sigma_{\text{pos,cyl}}$ and the percentage share of the angular component for $\sigma_r = 0.01$ mm, $\sigma_h = 0.0025$ mm 20

5.1 Comparison of estimated print time and percentage distribution of operations . . . 36

BIBLIOGRAPHY

[1] Stratasys, Inc., "Apparatus and method for creating three-dimensional objects." http://pdfpiw.uspto.gov/.piw?Docid=05121329, 1992. Patent US5121329A.

[2] D. Zhao and W. Guo, "Shape and performance controlled advanced design for additive manufacturing: a review of slicing and path planning," *Journal of Manufacturing Science and Engineering, Transactions of the ASME*, vol. 142, no. 1, pp. 1–23, 2020.

[3] D. Zhao, K. Ruan, G. Zhang, Y. Wang, Z. Chen, X. Zha, K. Dong, and Y. Xiong, *Supportless Cylindrical Printing of Rotating Components with Overhangs on a Rotary FDM 3D Printer*, pp. 2099–2117. 06 2024.

[4] D. Zhao and W. Guo, "Mixed-layer adaptive slicing for robotic additive manufacturing (am) based on decomposing and regrouping," *Journal of Intelligent Manufacturing*, vol. 31, pp. 985–1002, 2020.

[5] D. Zhao, T. Li, B. Shen, Y. Jiang, W. Guo, and F. Gao, "A multi-dof rotary 3d printer: machine design, performance analysis and process planning of curved layer fused deposition modeling (clfdm)," *Rapid Prototyping Journal*, vol. 26, no. 6, pp. 1079–1093, 2020.

[6] D. Zhao, W. Guo, and Y. Han, "General function sets theory-based type synthesis of the collaborative 3d printer for planar and non-planar printing," *Proceedings of the Institution of Mechanical Engineers, Part C: Journal of Mechanical Engineering Science*, vol. 236, no. 17, pp. 8965–8979, 2022.

[7] A. Reeser, A. Penwarden, D. Rudmann, D. Hurd, and R. D. Hurd, "An additive-lathe for the fabrication of curvilinear geometries in freeform," *3D Printing and Additive Manufacturing*, vol. 6, no. 3, pp. 139–147, 2019.

[8] J. Puma, Z. Yang, E. Johnston, Z. Zhang, X. Lan, L. Zhang, H. Hou, Z. He, A. Afify, M. A. Creighton, J. Li, and C. Cao, "3d necroprinting: Leveraging biotic material as the nozzle for 3d printing," *Science Advances*, vol. 11, no. 47, p. eadw9953, 2025.

[9] Y. Sterman, "Final project—the additive lathe." FabCentral, http://fab.cba.mit.edu/classes/863.11/people/yoav.shterman/secondUpdate.html, 2011.

[10] A. Kenich, M. Burnand-Galpin, E. Rolland, *et al.*, "Lathe-type 3d printer." https://www.scribd.com/doc/147351838/Lathe-Type-3D-Printer, 2013.

[11] S. Wang and K. Hunt, "Chinese company implants 3-d printed blood vessels into monkeys." CNN, https://www.cnn.com/2017/01/10/health/china-3d-printed-blood-vessels/index.html, January 2017.

[12] Revotek, "A comprehensive suite of patented technologies." www.revotekhealth.com/technology.aspx?t=1, 2017.

[13] A. Guerra, A. Roca, and J. de Ciurana, "A novel 3d additive manufacturing machine to biodegradable stents," *Procedia Manufacturing*, vol. 13, pp. 718–723, 2017.

[14] A. J. Guerra and J. Ciurana, “3d-printed bioabsordable polycaprolactone stent: The effect of process parameters on its physical features,” *Materials & Design*, vol. 137, pp. 430–437, 2018.

[15] A. J. Guerra, P. Cano, M. Rabionet, T. Puig, and J. Ciurana, “3d-printed pcl/pla composite stents: Towards a new solution to cardiovascular problems,” *Materials*, vol. 11, no. 9, p. 1679, 2018.

[16] F. B. Coulter, B. S. Coulter, J. R. Marks, and A. Ianakiev, “Production techniques for 3d printed inflatable elastomer structures: Part i—fabricating air-permeable forms and coating with inflatable silicone membranes via spray deposition,” *3D Printing and Additive Manufacturing*, vol. 5, no. 1, pp. 5–16, 2018.

[17] F. B. Coulter, B. S. Coulter, E. Papastavrou, and A. Ianakiev, “Production techniques for 3d printed inflatable elastomer structures: Part ii—four-axis direct ink writing on irregular double-curved and inflatable surfaces,” *3D Printing and Additive Manufacturing*, vol. 5, no. 1, pp. 17–28, 2018.

[18] Gear_Down_For_What, “Compound planetary gear box (37:1 or 49.3:1) NEMA 17, no hardware.” Thingiverse, `https://www.thingiverse.com/thing:2054378`, 2019. dostęp: grudzień 2024.

[19] R. Murray-Smith, “Worm gear with backlash compensation.” Thingiverse, `https://www.thingiverse.com/thing:7090375`, 2024. dostęp: grudzień 2024.

[20] MarlinFirmware, “Marlin firmware.” `https://marlinfw.org/`, 2024. Open source firmware for 3D printers, version 2.1.2.5.

[21] Kliment, “Printrun: Pure python 3d printing host software.” `https://github.com/kliment/Printrun`, 2024. Pronterface - GUI host software for 3D printers.

[22] G. Gao, F. Xu, J. Xu, G. Tang, and Z. Liu, “A survey of the influence of process parameters on mechanical properties of fused deposition modeling parts,” *Micromachines*, vol. 13, no. 4, p. 553, 2022.

[23] V. S. Jatti, M. S. Sapre, A. V. Jatti, N. K. Khedkar, and V. S. Jatti, “Mechanical properties of 3d-printed components using fused deposition modeling: Optimization using the desirability approach and machine learning regressor,” *Applied System Innovation*, vol. 5, no. 6, p. 112, 2022.

[24] J. Liu, M. A. Naeem, M. Al Kouzbary, H. Al Kouzbary, H. N. Shasmin, N. Arifin, N. A. Abd Razak, and N. A. Abu Osman, “Effect of infill parameters on the compressive strength of 3d-printed nylon-based material,” *Polymers*, vol. 15, no. 2, p. 255, 2023. PMID: 36679135; PMCID: PMC9862055.

[25] D. Norée, “3d benchy: The jolly 3d printing torture-test.” `https://www.3dbenchy.com`, 2015. Public Domain, dostęp: grudzień 2024.

[26] J. Allum, J. Kitzinger, Y. Li, V. V. Silberschmidt, and A. Gleadall, “Zigzagz: Improving mechanical performance in extrusion additive manufacturing by nonplanar toolpaths,” *Additive Manufacturing*, vol. 38, p. 101715, 2021.

[27] A. Gleadall, “Fullcontrol gcode designer: Open-source software for unconstrained design in additive manufacturing,” *Additive Manufacturing*, vol. 46, p. 102109, 2021.

[28] A. G. Dharmawan and G. S. Soh, “A cylindrical path planning approach for additive manufacturing of revolved components,” *Materials Science in Additive Manufacturing*, vol. 1, no. 1, p. 3, 2022.